SHAKING ENVIRONMENTAL EDUCATION PARADIGMS

PRACTITIONERS' NARRATIVES, CONTEXTUAL ELEMENTS, AND BIOCULTURAL APPROACHES

SHAKING ENVIRONMENTAL EDUCATION PARADIGMS

PRACTITIONERS' NARRATIVES, CONTEXTUAL ELEMENTS, AND BIOCULTURAL APPROACHES

Aina Brias Guinart

Academic dissertation
to be presented for public examination,
with the permission of the Faculty of Biological and Environmental Sciences of the University of Helsinki, in lecture room P674, Porthania, on 20th September 2023, at 10h.

Helsinki 2023

Copyright: © 2023 Aina Brias-Guinart (Synopsis)
© 2020 Aina Brias-Guinart, Aili Pyhälä, Mar Cabeza, published by Indian Ocean e-Ink (Chapter I)
© 2022 Aina Brias-Guinart, Kaisa Korhonen-Kurki, Mar Cabeza published by Wiley Periodicals LLC on behalf of Society for Conservation Biology (Chapter II)
© 2023 Aina Brias-Guinart, Tuomas Aivelo, Markus Högmander, Rio Heriniaina, Mar Cabeza, published by Taylor & Francis Group (Chapter III)
© 2023 Aina Brias-Guinart, Álvaro Fernández-Llamazares, Bruno Ramamonjisoa, Lena Reibelt, Lovasoa E. Razafindravony, Caroline Rojosoanotahina, and Mar Cabeza, (Chapter IV)
© Front Cover Illustration by Nady B. F. Ratsimbazafy
© Back Cover Illustration by Alain Rasolo
© Cover Design by Aleix Brias & Sara Martínez

Author: Aina Brias-Guinart
Doctoral Programme in Interdisciplinary Environmental Sciences
Faculty of Environmental and Biological Sciences
University of Helsinki, Finland
Supervisor: Senior Lecturer Mar Cabeza
Faculty of Environmental and Biological Sciences, University of Helsinki, Finland
Thesis advisory
committee: Professor Anna Uitto
Department of Education, University of Helsinki, Finland
M. Ed. Satu Jovero
SYKLI Environmental School of Finland, Finland
Pre-examiners: Senior Lecturer Caroline Howe
Faculty of Natural Sciences, Imperial College London, United Kingdom
Professor Marianne Krasny
College of Agriculture and Life Sciences, Cornell University, United States
Opponent: Senior Research Fellow Sarobidy Rakotonarivo
Department of Forestry and Environment, University of Antananarivo, Madagascar
ISBN 978-951-51-9428-2 (paperback)
ISBN 978-951-51-9429-9 (PDF)
https://ethesis.helsinki.fi/
Painsosalama, Turku 2023

For my grandfather Daniel,
I know you would be proud to have a second
doctor in the family.

For our son,
for the life that is soon to begin.

CONTENTS

ABSTRACT 9

INTRODUCTION 21
- Our global biodiversity crisis 21
- Environmental education as a conservation strategy in the Global South 22
- Uncertain evidence on the influence of education in conservation 24
- Calls to contextualise interventions 28

CONTEXT: MADAGASCAR 31
- Madagascar, a conservation spotlight 31
- A rich cultural heritage 34
- Glimpse of the school system 36

AIM AND OBJECTIVES 37

METHODOLOGY 39
- My journey 39
- Research design 42
- Data collection methods 43
- Methodological principles to ensure quality 48
- Ethics 49
- Positionality 50

MAIN FINDINGS AND DISCUSSION 53
- Status quo: the role of NGOs as the main actors, lack of impact evaluation and overlooked inclusivity 53
- Rationales behind environmental education beyond knowledge and attitudes 56
- Influence of context on the purpose of environmental education 60
- Towards culturally grounded environmental education 62
- Rethinking the potential of environmental education 65
- Walk the talk: reflections on my own research process 69
- Limitations, Merits and Future Research 73

CONCLUSIONS AND WAY FORWARD 77

REFERENCES 81

SUPPLEMENTARY MATERIALS 99

ORIGINAL PUBLICATIONS 111
- Chapter I 113
- Chapter II 121
- Chapter III 137
- Chapter IV 157

ABSTRACT

Biodiversity, essential for the health of our planet and human well-being, is deteriorating at unprecedented rates. A sustainable global future is only possible with transformative change, the adoption of locally relevant and equitable forms of conservation, and the recognition of the interwoven connections between biological and cultural diversity.

Environmental education (EE) has long been used as a conservation strategy to enhance human-environment relationships. Particularly in the Global South, EE is a cornerstone of many conservation projects, often led by non-governmental organizations (NGOs). Over the past decades, there have been consistent calls for accessible evidence of the ways in which EE helps achieve conservation success, but research is limited in context and audiences. Desires to find generalizable solutions in EE coexist with the calls to frame conservation strategies from locally relevant perspectives. Yet, global trends in education projects are still projecting Western environmental values, with few examples of meaningful involvement of local communities and recognition of diverse knowledge systems.

In this thesis, I explore, understand, describe and examine the role of EE as a conservation strategy to enhance human-environment relationships, and to establish locally relevant and equitable forms of conservation. Particularly, I focus on the role of conservation NGOs in Madagascar. This country offers a unique context to examine these questions due to its outstanding levels of both biological and cultural diversity. This thesis adopts principally a qualitative research approach, using interviews, questionnaires, on-site visits and literature insights as the main data collection methods. This research builds on five years of long-term engagement with EE practitioners in Madagascar since 2018, including eight months of in-depth field-based ethnographic work.

In the first chapter, I describe the key characteristics of the education programs and find that the status quo of EE in Madagascar reflects global patterns in terms of lack of exhaustive evaluation and a limited inclusive approach. The second chapter identifies practitioners' narratives of the ways in which EE helps to achieve conservation success. The findings suggest a range of complementary pathways beyond knowledge and attitudes that partially reflect theoretical advances on sociopsychological theories on learning and behavioural change. The third chapter describes the contextual elements that influence the purpose of EE. The findings illustrate the influence of the school curriculum, funders and Western epistemologies. Thus, I challenge the idea of generalizable EE solutions, and emphasize the importance of contextualised interventions. In the fourth chapter, I provide in-depth insights into the potential of biocultural approaches in EE. To do so, I present a conceptual framework to rethink EE from biocultural lenses, I identify

education initiatives with biocultural elements, and I discuss opportunities to further develop culturally grounded approaches.

Overall, this thesis provides an in-depth examination of the role of EE as a conservation strategy from the perspective of EE practitioners. Additionally, it provides valuable insights to rethink the role of EE in the Global South, offering recommendations on how to design efficient, equitable and locally relevant education interventions.

TIIVISTELMÄ

Maapallomme ja ihmisten hyvinvoinnille olennainen luonnon monimuotoisuus heikkenee ennennäkemätöntä vauhtia. Maailmanlaajuisesti kestävä tulevaisuus on mahdollista vain kestävyysmurroksen, paikallisesti toimivien ja oikeudenmukaisten luonnonsuojelutapojen ja luonnon ja kulttuurin monimuotoisuuden välisen kudelman tunnistamisen myötä.

Ympäristökasvatusta on pitkään käytetty ihmisen ja ympäristön välisten suhteiden parantamiseen luonnonsuojelutarpeissa. Erityisesti Globaalissa etelässä ympäristökasvatus on monien luonnonsuojeluhankkeiden kulmakivi ja usein kansalaisjärjestöjen vetämää. Viime vuosikymmeninä on jatkuvasti toivottu todistusaineistoa, miten ympäristökasvatus edistää luonnonsuojelun menestystä, mutta tutkimus kattaa heikosti erilaisia toimintaympäristöjä tai toimijoita. Toisaalta ympäristökasvatukselta toivotaan yleismaailmallisia ratkaisuja ja toisaalta taas paikallisiin luonnonsuojelutarpeisiin ja kulttuuriin sopeutettuja ratkaisuja. Ympäristökasvatuksen globaali trendi on kuitenkin levittää länsimaisia ympäristöarvoja, kun taas paikallisten yhteisöjen merkityksellisestä osallisuudesta ja erilaisten tietämisjärjestelmien tunnustamisesta on vain harvoja esimerkkejä.

Kartoitan, ymmärrän, kuvaan ja tarkastelen väitöskirjassani ympäristökasvatuksen roolia luonnonsuojelustrategiana, jossa pyritään parantamaan ihmisen ja ympäristön välistä suhdetta ja käynnistämään paikallisesti toimivia ja oikeudenmukaisia suojelutoimia. Erityisesti keskityn luonnonsuojelukansalaisjärjestöjen rooliin Madagaskarilla. Madagaskar tarjoaa ainutlaatuisen viitekehyksen ympäristökasvatuksen ja luonnonsuojelun välisen roolin kartoittamiseen, koska maassa on huomattavan monimuotoinen luonto sekä paikallinen kulttuuri. Tutkielmassani on ensisijaisesti kvalitatiivinen tutkimusote ja käytän haastatteluja, kyselylomakkeita, paikallisiin oloihin tutustumista ja aiempaa kirjallisuutta keskeisimpinä aineistonkeruun tapoina. Tutkimukseni perustuu viisi vuotta kestäneeseen yhteistyöhön madagaskarilaisten ympäristökasvattajien kanssa, josta kahdeksan kuukautta on ollut syvällistä etnografista kenttätyötä paikan päällä.

Ensimmäisessä artikkelissa kuvaan kasvatushankkeiden keskeisiä piirteitä ja havaitsen, että ympäristökasvatus Madagaskarilla vastaa kansainvälistä tilannetta, jossa ympäristökasvatuksen vaikuttavuudesta puuttuu kattava arviointi ja osallistavaa lähestymistapaa käytetään harvoin. Toisessa artikkelissa tunnistan ympäristökasvattajien narratiiveja tavoista, joilla ympäristökasvatus auttaa luonnonsuojelun onnistumisessa. Löydökseni viittaavat, että ympäristönkasvattajien narratiiveissa esiintyy tietojen ja asenteiden lisäksi käsitteitä, jotka heijastelevat oppimisen ja käyttäytymismuutosten sosiaalipsykologisia teorioita. Kolmas artikkeli kuvaa kulttuurisia tekijöitä, jotka

vaikuttavat ympäristökasvatuksen merkityksen hahmottamiseen. Löydökset valottavat koulujen opetussuunnitelmien, rahoittajien ja länsimaisen tietokäsityksen vaikutusta. Haastan yleispätevien ympäristökasvatuksellisten ratkaisujen olemassaolon ajatuksen ja korostan paikalliseen viitekehykseen sopeutettujen lähestymistapojen tärkeyttä. Neljännessä artikkelissa jaan näkemykseni biokulttuuristen lähestymistapojen mahdollisuuksiin ympäristökasvatuksessa. Esittelen teoreettisen viitekehyksen, jolla ympäristökasvatusta voi uudelleenhahmottaa biokulttuuristen linssien läpi. Lisäksi tunnistan kasvatushankkeita, joissa käytetään biokulttuurisia osasia ja pohdin miten voi entisestään kehittää kulttuurisesti maadoitettuja lähestymistapoja.

Kokonaisuudessaan väitöskirjani tarjoaa ympäristökasvatuksen syvällisen tarkastelun luonnonsuojelun välineenä ympäristökasvattajien näkökulmasta. Lisäksi se tarjoaa arvokkaita näkökulmia ympäristökasvatuksen roolin uudelleen arvioimiseksi Globaalissa etelässä sekä suosituksia, kuinka suunnitella tehokkaita, oikeudenmukaisia ja paikallisesti merkityksellisiä kasvatushankkeita.

Tiivistelmän on kääntänyt Tuomas Aivelo.

FOTO-KEVITRA

Amin'izao fotoana izao dia mihazakazaka ny fitsitotonganan' ny zava-boary izay anisan'ny singa lehibe amin'ny fahasalaman'ny tontolo iainantsika sy ny olom-belona. Ny ho avy maneran-tany lovain-jafy dia ho tanteraka raha toa ka misy ny fiovana, ny fananana fomba fiarovana ny tontolo iainana mifanaraka amin'ny eo an- toerana sy manaraka ny etika, ary ny fahafantarana ny fifandraisan'ny fifahasamihafana eo amin'ny lafiny biolojika sy ny kolon-tsaina.

Efa nampiasana hatrizay ho fanatsarana ny fifandraisan'ny olom-belona sy ny tontolo iainana ny fanabeazana mikasika ny tontolo iainana. Indrindra indrindra,ny any amin'ny tany an-dalam-pandrosoana dia ny fanabeazana mikasika ny tontolo iainana no tena fototr'ireo tetik'asa fiarovana ny tontolo iainana, izay matetika tarihin'ireo fivondronana tsy miankina.Tato anatin'ny amam-polopolo-taona izay no efa nisy fiantsoana hahafahana mijery ny tena vokatsoan'ny fanabeazana mikasika ny tontolo iainana, saingy ireo fikarohana misy dia mbola tsy mifanaraka amin'ny toe-java-misy sy ny vondron'olona tarigetra. Eo amin'ny lafin'ny fanabeazana mikasika ny tontolo iainana dia maro ny hetaheta te hahafantatra na ny vahaolana mety afaka ampiarana maneran-tany na ny fanintsiana ny tetika mikasika ny fiarovana ny tontolo iainana mba tena hifanaraka amin'ny eo an-toerana.Ny matetika hita eo amin'ny lafin'ny tetik'asam-panabeazana nefa dia mbola mifanaraka amin'ny firehan'ireo tandrefana, ary mbola vitsy ny tena handraisan'ireo fivondronana ifotony sy tena maneho ny fisian'ny fifahasamihafan'ny fahaiza-manao.

Hampiseho,handalina,hamaritra ary hamakafaka ny anjara asan'ny fanabeazana mikasika ny tontolo iainana ho singa ampiasaina eo amin'ny fanatsarana ny fifandraisan'ny olom-belona sy ny tontolo iainana aho ato anatin'ity foto-kevitra ity ary haneho fomba fiarovana ny tontolo iainana mifanaraka amin'ny eo an-toerana ary ara-drariny. Hampiseho manokana ny anjara asan'ireo fivondronana tsy miankina eo amin'ny sehatry ny fiarovana ny tontolo iainana eto Madagasikara aho. Anisan'ny toerana hahafahana mamakafaka ireo fanontaniana ireo ity toerana ity noho izy manana harena voajanahary miavaka ary ahitana fifahasamihafana be eo amin'ny lafin'ny kolon-tsaina. Ity Foto-kevitra ity dia natao indrindra ho fikarohana miompana kokoa amin'ny toe-java-misy, arahina fanadihadiana, fanontaniana maromaro, fitsidihana an-toerana ary fandinihana literatiora ho singa fanangonana tahirin-kevitra. Fitambarana fiaraha-miasa nandritra ny 5 taona nanomboka ny 2018 niaraka tamina mpisehatra eo amin'ny fanabeazana mikasika ny tontolo iainana ity fikarohana ity, ary 8 volana fidinanan an-tsehatra nandalinana ny fifahasamihafan'ny foko.

Amin'ny andiany voalohany dia hanazava bebe kokoa ny karazana tetikasam-panabeazana aho sy hampiseho fa ny toe-java misy eo amin'ny lafin'ny fanabeazana mikasika ny tontolo iainana eto Madagasikara dia mbola mifanaraka amin'ny fomba fijery maneran-tany amin'ny tsy fananan'ny rafitra fanaovana tombana sy ny mbola tsy fananany rafitra manome lanja ny karazan'olona samihafa. Ny andiany faharoa dia hizara ny tantara avy amin'ireo mpisehatra izay maneho ny fahombiazan'ny fanabeazana mikasika ny fiarovana ny tontolo iainana aho eo amin'ny fanatratrarana ny tanjona eo amin'ny fiarovana ny tontolo iainana. Nahitana karazana lalam-panovana izay mihoatra noho ny fahalalana sy fomba fiaina ary mampiseho ampahan'ny fandrosoana eo amin'ny teoria ara-tsosialy sy psykolojia mikasika ny fomba fianarana sy fihovam-pomba piaina nandritra ity fikarohana ity. Ny vokatra hita dia maneho ny fiantraikainy eo amin'ny fandaharam-pampianarana, ny mpamatsy vola ary ny epistemolojia. Ny andiany fahatelo dia hampiseho bebe kokoa ireo singa maneho ny antom-pisian'ny fanabeazana mikasika ny tontolo iainana aho. Noho izany dia hampiseho aho fa tsy voatery mampiasa ny fomba fanabeazana mikasika ny tontolo iainana mitovy amin'ny any ivelany foana ary hanome lanja kokoa ny maha zava-dehibe ny fandrafetana tetik'asa mifanaraka amin'ny toe-java misy eo an-toerana. Amin'ny andiany fahaefatra dia hampiseho misimisy kokoa ny mety ho tombon-tsoan'ny fanabeazana mikasika ny tontolo iainana eo amin'ny fifandraisan'ny riba sy ny zava-boary. Mba hahatratrarana izany dia hampiseho fomba fijery mampifandray ny olom-belona sy ny zava-boary aho eo amin'ny fanabeazana mikasika ny fiarovana ny tontolo iainana, hampiseho tetik'asa misy singa mampiseho ny fifandraisan'ny zavaboary sy ny riba, ary ihany koa hizara fomba hampandrosoana ny fandrafetana ny tetik'asa mifandraika kokoa amin'ny eo an-toerana sy ny riba.

Amin'ny ankapobeny ity foto-kevitra ity dia natao handinihina ny anjara asan'ny fanabeazana mikasika ny fiarovana ny tontolo iainana ho fomba enti-miaro ny tontolo iainana avy amin'ny fomba fijerin'ny mpisehatra eo amin'ny fanabeazana mikasika ny tontolo iainana. Maneho indrindra ihany koa ny tena anjara asan'ny fanabeazana mikasika ny tontolo iainana any amin'ny tany an-dalam-pandrosoana, ary manome soso-kevitra amin'ny fandrafetana fomba fanabeazana mahomby sy ara-drariny.

Mpandika teny: Tsiky Maxey

ORIGINAL PUBLICATIONS

Chapter I

Brias-Guinart, A.; Pyhälä, A.; Cabeza, M. (2020) Linking Biodiversity Conservation and Education: an exploratory research of Education Programmes implemented in Protected Areas in Madagascar. *Madagascar Conservation and Development*. DOI: 10.4314/mcd.v15i1.4

Chapter II

Brias-Guinart, A., Korhonen-Kurki, K., & Cabeza, M. (2022). Typifying conservation practitioners' views on the role of education. *Conservation Biology*, e13893. DOI: 10.1111/cobi.13893

Chapter III

Brias-Guinart, A., Aivelo, T., Högmander, M., Heriniaina, R. & Cabeza, M. (2023) A better place for whom? Practitioners' perspectives on the purpose of environmental education in Finland and Madagascar, *The Journal of Environmental Education*, 54:3, 163-180. DOI: 10.1080/00958964.2023.2178371

Chapter IV

Chapter IV. Brias-Guinart, A., Fernández-Llamazares, Á., Ramamonjisoa, B., Reibelt, L., Razafindravony, L., Rojosoanotahina, C., and Cabeza, M. Biocultural approaches to environmental education – evidence from 61 education projects across Madagascar. *Manuscript*.

AUTHOR CONTRIBUTIONS

The chapters of this thesis are based on three journal articles and one manuscript (see opposite page for complete citations). I functioned as a lead author in each of them. The individual authors contributed to the publications as follows:

	Chapter I	Chapter II	Chapter III	Chapter IV
Conceptualisation	AB-G, MC, AP	AB-G, MC, AP	AB-G, TA, MC	AB-G, AF-LL, MC, LeR
Data collection	AB-G	AB-G	AB-G, MH	AB-G
Data analysis	AB-G	AB-G	AB-G, TA	AB-G
Writing – original draft	AB-G	AB-G	AB-G	AB-G
Writing – review and editing	AB-G, AP, MC	AB-G, KK-K, MC	AB-G, TA, MH, RH, MC	BG-A, AF-LL, BR, LeR, LoR, CR, MC

AB-G Aina Brias-Guinart
AF-LL Álvaro Fernández-Llamazares
AP Aili Pyhälä
BR Bruno Ramamonjisoa
CR Caroline Rojosoanotahina
KK-K Kaisa Korhonen-Kurki
LeR Lena Reibelt
LoR Lovasoa Razafindravony
MC Mar Cabeza
MH Markus Högmander
RH Rio Heriniaina
TA Tuomas Aivelo

ACKNOWLEDGEMENTS

Aili, I would have never come to Finland if it had not been for that afternoon in La Nena in Gracia. Thank you for believing in my project, for your priceless support on the first years of my PhD, and for inspiring me with your activism, idealism, and coherence.

Mar, I cannot thank you enough for all you have done for me. Thank for being a flexible and supportive supervisor (and the sole one for the last three years!), for letting me dream big and built my own path in the academic world. Thank you so much for being a pillar for me in Helsinki, and for your invaluable support into my first steps into motherhood. *Moltes gràcies*!

This PhD would have never started if it had not been for two key people. Thank you so much **William**, for showing me how hard doing a PhD could be, and still encourage me to do one myself. *Moltes gràcies* **Dani**, for being even more sure than I was than doing a PhD was a good idea, for always being willing to listen to my dilemmas, and reminding me that time goes by very fast.

I wish to thank the members of my thesis committee, **Anna Uitto, Kaisa Korhonen** and **Satu Jovero**, for your advice, ideas and critical thoughts throughout the years. Special thanks to **Julia Jones**, for participating as a guest at one of my thesis committees during your visit in Helsinki, and your wise advice throughout the years. Thank you **Sirkku Juhola**, for being so responsive and helpful in the latter stages of the PhD and making all the bureaucratic procedures much smoother. Thanks **Marjo Saastamoinen**, for stepping in as a custos in the last moment, and providing the reassuring support I so much needed.

I would like to express my gratitude to **Dr. Caroline Howe** and **Dr. Marianne Krasyn** for acting as pre-examiners of this thesis, and giving valuable and encouraging comments. I am deeply grateful to **Dr. Sarobidy Rakotonarivo** for taking the time to read my thesis and coming to Finland to act as my opponent. I am very much looking forward to our discussions.

I am deeply grateful to the funding bodies that have supported this thesis, including the DENVI Doctoral Programme, the Ella and Georg Ehrnrooth Foundation, HELSUS, FinCEAL, and the Global Diversity Foundation.

I have been extremely lucky to be part of the **Global Change and Conservation** family. Thank you so much to the current, past and extended members: **Erin, Antti, Julien, María, Sara (Nunes), Belete, Bayarmaa, Abhilash, Ricardo, Dani, Abolfazl, Markus H., Arun, Anttoni, Giorgio, Cindy, Amaia, Mihika, Francisco, Aina R., Adrián, Ariadne, Karolina, Heta, Santtu, Pablo, Federica, Moustapha, Tiago**, and some others I may have forgotten. Thanks to all of you for providing a place to belong, for expanding my views on the broader

conservation field (and beyond!), for offering a safe and enriching space to present my ideas and obtain valuable feedback. Special thanks to **Tuomas**, for always finding time to answer my endless questions (academic, pandemic and gastronomic), and sharing the office with me for so long. **Irene**, thank so much for offering me a first home in Helsinki, for our endless shared lunches (and dinners), and for your friendship. **Marketta**, this PhD would have never been the same without you. From that first lunch planning the fieldwork to Madagascar, to all the shared experiences throughout the years. It has been a true honour to share every step of this adventure with you. For many more together!

Álvaro, my deepest gratitude for helping me, at times, as my unofficial supervisor. Thank you for your endless advice, ideas and support, and for being a role model for me on dreaming big (and achieving it!) in academia. **Sara**, thank you for caring about me, and to you and Álvaro, for welcoming us into your family, for the shared meals and leikkipuisto, and for being an anchor in Helsinki. **Nils**, thank you for reminding me about the beauty and excitement of simple things. *Moltes gràcies*!

Thank you to all the members of the **Digital Geography Lab**, for welcoming me to the group in these last exciting and exhausting months of my life. Specially to **Tuuli**, thank you for giving me the opportunity to continue my academic career, and supporting me on the latter stages of finishing this PhD. **Johanna**, thank you for our academic discussions on qualitative methods, and the challenges of being in between disciplines. I very much look forward to continue working with you in the MOBICON project!

I wish to thank the **DENVI community**, especially to **Karen**, thank you for giving your time to make students' life much easier. Thank you to the **DENVI Board** for the two years as a Board member, for listening and respectfully consider all my contributions. Thank you to all the DENVI students for providing support, inspiration, and a community; particularly, thanks to **Sophia, Chris, Vuokko, Janne, Joel, Carlos, Alizée**, and many more! Special thanks to **Rachel**, for stopping at that bench in Arabianranta, and to **Meg**, for sharing with me the adventures of being student representatives.

I am deeply grateful to all those I have met during these years in Helsinki, for making my life more fun (and sweeter!): **Anita, Attila, Wenfei, Will, Gerardo, Ana S., Julia, Emy, Fernando, Àlex, Maria, Gabriela, Higuel, Stefan, Anne-Lise, Anniina**. Speacially, thank you **Andrew** and **Marion**, for priceless shared moments of confidences, lunches, and walks. Special thanks to HelTetris members, current and past ones, **Manthoula, Roberto, Lisa, Paul, Paul G., Mariam, Zoli, Lisa, Patrick, Josefina, Chí Nhân, Francesco**, and many more, for being my refugee of creativity during all these years, a safe space where I could just play and forget about the rest.

These PhD journey has come with the privilege to meet marvellous practitioners, colleagues and friends in Madagascar. To all of them, *misaotra betsaka*! This journey would have never been the same without you. Firstly, I would like to thank all the NGOs who have opened their doors to me, sharing their projects with enthusiasm. Particularly, *misaotra betsaka* to **Tsiory** and **AinaT**, and the rest of the ExplorerHome family including **Fetra**, for inviting me to come along with the SciOut cohort, spending 5 unforgettable days camping in the rainforest.

In particular, I would like to mention **Temba**, thank you for solving one thousand logistical problems, for guiding me during my first visit in Madagascar, and for our shared adventure with the *dahalo*. **Santatra**, thank you for reminding me on the importance to be brave. **Tanjona**, thank you so much for making my life in Madagascar one million times more pleasant, and the weekends at the countryside to get my energy back. **Neny'I Tanjona**, *misaotra betsaka* for making me feel at home, when I was away from my real one. To **Lena, Matze and Hanitra**, thank you for dreaming together (and making it a reality!) on the possibility of a big workshop of environmental education in Madagascar. **Adrià and Joan**, *gràcies* for our shared conservations with *rhum arrangé*. **Fidy and Tsiky**, thank you for patiently teaching me Malagasy. Thank you **Bruno and Rio**, your priceless contributions have made each shared article much better. To the **Centre Valbio** family, *misaotra betsaka* to the administrative and technical staff, the cooks, the researchers and the guides, for their readiness to help and their efforts to make researchers' lives easier. Huge thanks to **Michael**, for your support and our shared meals of confidences. **Rasolo**, thanks for always having time for a chat, and that amazing pillow! **Caroline and Maria**, thanks for making the MaTsi project a reality! **Matthieu**, thanks for your endless good mood and our shared adventures with the MaTsi project. **Fitiavana**, thanks for reading my emotions when you barely knew me. **Nirina**, I will never thank you enough for your endless help during my research, for your bravery and our shared conversations about life. And thank to **Fenohery**, for our fights on top of the bed. **Lova**, there are no words to describe how grateful I am. My colleague, flatmate, travel companion, but, above all, my friend. Thanks for always asking the right questions at the right moment. To **Salomé**, thank you for holding my hand from the beginning, and making our trip one million times more fun.

Pels meus amics de sempre, **la Clara, la Mariona, el Dídac, el Sergi, el Ferran, l'Albert R., l'Albert J., i el Genís**. Moltes gràcies per recordar-me que hi ha un món fora de la vida acadèmica, i per fer-me sentir a casa cada cop que tornava a Barcelona. En especial, gràcies al **Guillem**, per contagiar-me la teva emoció per descobrir Helsinki en arribar, malgrat el fred. **Alicia**, gràcies per totes les converses i trucades per zoom compartint la nostàlgia i l'adrenalina de viure lluny de Catalunya.

Finalment, gràcies infinites a tota la meva família. Sóc on sóc, i sóc qui sóc gràcies a tots vosaltres. Mai us podré agrair prou el vostre suport incondicional i el vostre respecte per les meves decisions, encara que mai hàgiu acabat d'entendre del tot de què anava això de fer un doctorat. En especial, vull donar les gràcies a la meva àvia **Paca**, per contagiar-me les seves ganes inacabables d'aprendre, als meus avis **Daniel i Paquita**, per portar-me a conèixer noves cultures des de ben petita, al **Dani i la Sol**, pels sopars compartits somniant plans de futur, a la **Mar**, per les nits sense dormir per acabar el research brief, al **meu pare**, per entendre el desig que em movia a viure lluny, a la **meva mare** per ser-hi sempre, al **meu germà**, per ser-hi quan jo no hi he pogut ser i per les nostres converses eternes, i a la **Sara** per la teva generositat i preguntar sempre com anaven les coses. A la meva família adoptiva la **Dolors, la Cristina, el Dani, el Pere i l'Elena**, gràcies per obrir-me les portes de la vostra família des del principi i fer-me sentir com una més.

Miquel, hem recorregut junts el camí del doctorat, des de la meva primera visita a Helsinki fins ara. Gràcies per la teva constància i tenacitat, per la teva paciència infinita (especialment als últims mesos), pels nostres matins de piscina i els caps de setmana per acabar la tesi. Gràcies per entendre millor que ningú les meves ganes d'anar a Madagascar, per somiar plegats i fer dels nostres somnis una realitat. Gràcies, una vegada i una altra. T'estimo moltíssim. Per una aventura que només fa que començar.

Pel **nostre fill**, perquè si no haguessis aparegut en les nostres vides, potser encara estaria acabant el doctorat. Per recordar-me, fins i tot abans de néixer, la importància de les coses. Per acompanyar-me a cada instant en aquests últims mesos intensos i inoblidables. Continuaré treballant per fer d'aquest món un lloc millor per tu, i per tots els que vindran. T'esperem.

INTRODUCTION

Our global biodiversity crisis

Biodiversity is deteriorating worldwide at unprecedented rates (IPBES, 2019). Biodiversity is worth protecting for its own sake, and for its myriad of contributions to human well-being, ranging from tangible benefits such as food, energy, medicines and materials, as well as intangible ones such as aesthetic, spiritual, cultural values (CBD, 1992; Klain et al., 2017). Most of these contributions cannot be fully replaced by human-made substitutes, and some are just irreplaceable (IPBES, 2019). Human actions are, undoubtably, the main driver of biodiversity decline. The major direct drivers of biodiversity loss are changes in land and sea use, overexploitation of plants and animals, climate change, pollution, and invasive alien species (IPBES, 2019). These direct drivers are influenced by an array of underlying societal causes: demographic, sociocultural, economic, technological, and relating to institutions and governance (Díaz et al., 2019). Moreover, these socioeconomic and environmental drivers can interact at a distance (telecoupling) as a result of our increasingly interconnected world (Carrasco et al., 2017; Liu et al., 2013).

Conservation biology originated as a crisis discipline to provide the principles and tools to preserve biological diversity (Soulé, 1985). Responding to global biodiversity decline, protected areas have been the cornerstone of conservation (Barnes et al., 2017; Chape et al., 2008). The exclusionary "fortress conservation" model, historically dominating and still prevailing today, aims at separating people from wildlife, and has consequently excluded and displaced people from protected areas in many parts of the world (Barrett et al., 2013; Brockington & Igoe, 2006; Madzwamuse et al., 2020), leading to undesirable consequences for human well-being and biodiversity (Kashwan et al., 2021). Yet, conservation encompasses a spectrum of approaches, and the framing and purpose of conservation has slowly shifted. Since recent decades, there have been ongoing debates on the relationship between people and nature (Folke et al., 2021; Mace, 2014; Pascual et al., 2021), the role of local communities living close to areas of conservation interest (Adams & Hutton, 2007; Brockington, 2004; Dawson et al., 2021; Oldekop et al., 2016), and the balance between biodiversity conservation and human well-being objectives (Fedele et al., 2021; McShane et al., 2011; Zafra-Calvo et al., 2020).

Increasingly, conservation research and practice are acknowledging the social dimensions of conservation (Bennett et al., 2017; Shackleton et al., 2023). Therefore, while the fortress conservation model persists today (Domínguez & Luoma, 2020; Mace, 2014), there has been a global shift towards community involvement, including grassroots approaches such as community-based conservation (Ward et al., 2018a), with the aspiration to establish more

locally relevant and equitable forms of conservation (Aldashev & Vallino, 2019; Dressler et al., 2010). In the context of the Global Biodiversity Framework (CBD, 2022), researchers and policy-makers advocated for the foregrounding of Indigenous Peoples and local communities in biodiversity policy and practice, and the need to adopt rights-based and socially-just conservation models (Pascual et al., 2021; Reyes-García et al., 2022).

The concept of "biocultural" diversity has emerged as part of the efforts to narrow the widening nature-culture divide. The Declaration of Bélem (1988), a key turning point, recognized the inextricable link between cultural and biological diversity. Since then, there is emerging recognition that cultural diversity is intrinsically linked to the protection of biological diversity (Garnett et al., 2018; Pretty et al., 2009) and, likewise, threatened by similar pressures (Rozzi et al., 2018). Thus, transcending conservation debates, a growing number of researchers are advocating for biocultural approaches to conservation (sensu Gavin et al., 2015) to foster transformations towards equitable and sustainable futures (Bataille et al., 2021; Hanspach et al., 2020; Plieninger et al., 2020). Biocultural approaches are place-based, explicitly take a systems perspective, and emphasize the links and feedbacks between ecological states and human well-being (Bridgewater & Rotherham, 2019; Rozzi et al., 2018; Sterling et al., 2017; Turner et al., 2022). The term biocultural has been defined differently along the decades (Bridgewater & Rotherham, 2019), and its use has not been exclusive within the conservation field (Wiley & Cullin, 2016). In this thesis, I embrace the definition of Gavin et al. (p1., 2015) of biocultural approaches to conservation as: "conservation actions made in the service of sustaining the biophysical and sociocultural components of dynamic, interacting, and interdependent social–ecological systems."

Environmental education as a conservation strategy in the Global South

There is probably not a single history of the origins of environmental education (EE), and its development did not occur in isolation but in a context of world events (Carter & Simmons, 2010). Reflecting a global concern about environmental degradation, the 1970s was a major turning point in EE internationally (Gough, 2013; Monroe & Krasny, 2016). The 1972 Stockholm conference set the stage for greater awareness on the need to advance EE internationally (Carter & Simmons, 2010). Principle 19 of the Stockholm declaration specifically calls for: "education in environmental matters, for the younger generation as well as adults" (UNEP, 1972). After that, two subsequent conferences still stand today as the key events that facilitated the evolution of EE into a global practice (Carter & Simmons, 2010; Monroe & Krasny, 2016). The Belgrade Charter (1975) was established as a result of a series of regional workshops for education practitioners. Two years later, it was taken to

the first international intergovernmental conference devoted to EE in Tbilisi in 1977. The conference led to the UNESCO Tbilisi Declaration (1977) that prioritized EE to help address environmental problems and formalized the field of EE (Gough, 2013). As a result, EE was defined as follows:

> Environmental education is a learning process that increases people's knowledge and awareness about the environment and its associated challenges, develops the necessary skills and expertise to address the challenges, and fosters attitudes, motivations, and commitments to make informed decisions and take responsible action.

Since then, a multiplicity of definitions have emerged. Nowadays, a range of different activities can be called EE: from nature walks in a national park, to planting trees in forest fragments, to an awareness poster distributed in local schools. Thus, EE encompasses a full constellation of pedagogical tools, target audiences, and settings. A common classification distinguishes between formal, non-formal and informal EE (Monroe & Krasny, 2016):

- Formal EE: determined by a standardized school curriculum and typically occurs in primary, secondary and tertiary (college and university) education.
- Non-formal EE: not part of a standardized school curriculum, the objectives, generally long-term, are determined by the implementing organization.
- Informal EE: it is often spontaneous, and occurs anywhere where education information is displayed, such as parks, educational fairs, television and radio.

Considering the myriad of definitions of EE, in this thesis I use "environmental education" as an umbrella term to embrace concepts such as conservation education, education for sustainability and education for sustainable development. Thus, my understanding of EE encompasses a wide spectrum of tools and learning activities that are conducted in the context of biodiversity conservation, with the overall goal to equip individuals and institutions to respond to environmental challenges and nurture pro-environmental behaviors and actions both at the individual and collective level (Krasny, 2020; Wals & Benavot, 2017).

Historically, EE has been used as a conservation strategy to enhance human-environment relationships and to achieve conservation success (Ardoin et al., 2020; Jacobson, 1987; Jacobson et al., 2015; Norris & Jacobson, 1998; Sauve, 2005; Western et al., 1989). Particularly in the Global South, EE has been – and remains - a cornerstone of many conservation projects as a tool to enhance biodiversity conservation and bring about positive social and environmental change (Dietz & Nagagata, 1995; Freund et al., 2019; Jiménez et al., 2017; Leeds et al., 2017). Most of these projects target schoolchildren but they occur outside the classrooms, in a non-formal setting (e.g., Breuer et al., 2017; Superina et al., 2019). They are generally led by non-governmental organizations (NGOs), targeting

communities living near protected areas (e.g., Esson & Moss, 2016; Freund et al., 2019; Leeds et al., 2017). They generally include explanations about the wildlife of the area, often focusing on single species (e.g., Bizerril et al., 2011; Nekaris et al., 2018), as well as addressing environmental issues and threats (e.g., Burnett et al., 2016; Pietri et al., 2009).

Uncertain evidence on the influence of education in conservation

Conservation organisations worldwide include education programmes in their interventions, with the general shared belief amongst practitioners that education impacts conservation. Yet, there is limited empirical evidence for this relationship (Carleton-Hug & Hug, 2010; Esson & Moss, 2016; Norris & Jacobson, 1998). Over the past several decades, practitioners, policy-makers, and funders have consistently called for accessible evidence of the ways in which EE helps achieve conservation outcomes (Ardoin & Heimlich, 2013; Jacobson, 1987). Researchers and practitioners have answered the call to evaluate EE, resulting in a range of scientific literature evaluating EE outcomes (Burnett et al., 2016; Ferreira, 2012; Howe, 2009; Moorman, 2006; Natale et al., 2017). At the same time, this literature may not reflect all the programmes being evaluated, as some evaluations may never become published in peer-reviewed journals and remain at most as internal reports (Monroe, 2010).

Yet, there are limitations in the existing evaluations. I conducted a systematic review (Box 1) to analyse evaluated EE programs on a global scale in order to better understand (1) outcomes evaluated, (2) type of evaluation design, and (3) trends in inclusivity and local context in these programs. Whilst previous reviews of education programmes have equally investigated EE outcomes for conservation (e.g. Ardoin et al., 2020; Thomas et al., 2019), this review was the first to explore in detail questions about inclusivity.

Complementing recent reviews (Ardoin et al., 2020; Thomas et al., 2019), my findings reveal that most EE studies focus their evaluations on measuring cognitive indicators such as changes in knowledge and attitudes, and that very few studies document changes in behaviour, environmental improvement, and conservation outcomes. Additionally, most of them measure short-term changes using before (pre-) and after (post-) questionnaires (e.g., Breuer et al., 2017; White et al., 2018), and very few conduct long-term evaluations (at least after a year) (Box 1), with some exceptions of recent works adopting rigorous and innovative evaluation methods (e.g., Brown et al., 2020; Howe, 2009; Nekaris et al., 2018). Thus, the EE arena reflects the consistent calls for strengthening the evaluation of conservation measures beyond immediate outcome and outcome indicators (Larsen & Brockington, 2018).

BOX 1. OVERVIEW OF EE IN PRACTICE: IMPLEMENTATION, EVALUATION AND INCLUSIVITY

Methods in brief (refer to Appendix S1 for more details): I searched Web of Science combining three sets of terms: environmental education and selected synonyms, evaluation and synonyms, protected area and synonyms. I obtained 874 citation records. After full review, the final sample included 40 peer-reviewed articles published in English between 1994-2018.

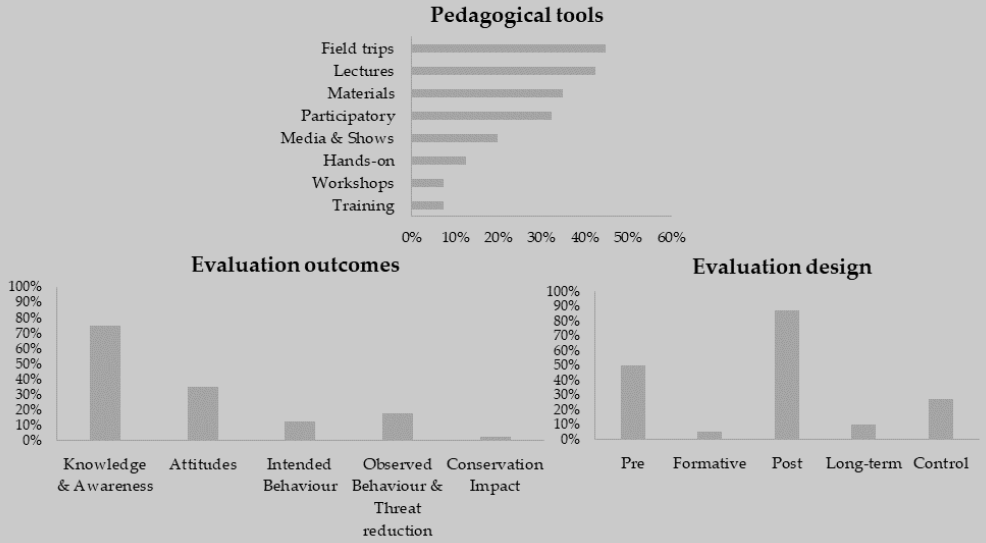

Target audience. Most of the programs (53%) were addressed to schoolchildren. Other targets were: recreational users (23%) (e.g. ecotourists, divers and recreational boaters), general audience (13%), teachers and educators (10%), resource users (5%) and managers (3%).

Pedagogical tools. A diversity of tools were used, specially common were fieldtrips (45%), lectures (43%), materials such as books, comics or posters (35%), participatory methods such as games, role-playing and art activities (33%), and media and shows such as films, radio and theatre plays (20%).

Evaluation. Most evaluations focused on knowledge and awareness (75%) and attitudes in a lesser extent (35%). Most evaluations were conducted after the program (88%), and half of them included a pre- and post- design (50%). Few examples included long-term evaluation (10%), and only two cases (5%) conducted formative evaluation (process evaluation). Long term evaluations were often conducted one-year after the interventions. One exceptional study (Leisher et al., 2012) in Indonesia conducted an evaluation five years after.

Local context and inclusivity. There were a range of strategies when adapting the content to the local context. In some cases, education programs for a Western audience were adapted to the local context, as in the education program in Congo using video and theater (Breuer et al., 2017). Others designed the content specifically for a certain place and context (e.g., Bizerril et al., 2011; Dieser & Bogner, 2016; Ferreira, 2012). In some cases, the content was designed to be integrated with the national curriculum (e.g., Broussard et al., 2001; Kuhar et al., 2010).

The content of most education programs focused on wildlife, landscapes and threats. Yet, some others incorporated biocultural contents, linking the natural and cultural heritage and celebrating and valuing local culture (e.g., Bizerril et al., 2011; Torkar & Valenčak, 2016). For example, the article by Mammadova (2017) described an education project in the Mount Hakusan Biosphere Reserve in Japan were students had the opportunity to learn with local communities about traditional food making, livelihoods and spiritual practices. Additionally, one example in Malaysia aimed to integrate different knowledge systems: local knowledge with conventional science in a program targeted at park guides (Amin & Yok, 2015).

Local communities were involved in a myriad of ways. In some cases, community members participated as actors in educational films (Leeds et al., 2017), local assistants (Breuer et al., 2017), or local guides (Moorman, 2006). In others, local communities were the ones implementing the projects, often after having received an initial training (Patterson et al., 2009; Pietri et al., 2009). One noteworthy example is the article by Natale et al. (2017) that described an education program that was designed after an initial survey that identified the interests and needs of the educational community around an urban natural reserve in Argentina (Natale et al., 2017). Another exceptional example was the communal production of a book in Brazil about the region's culture, history, environment, and economy (Bizerril et al., 2011).

The narrow focus of the evaluations on knowledge and attitudes stems potentially from a simplified linear path from "knowledge to attitudes to behaviour" (i.e. information deficit model), based on the assumption that we can change people's behaviour by increasing knowledge (Galafassi et al., 2018; Jacobson, 2010). However, a growing body of research suggest a range of dynamic and psychological factors that influence human behaviour and decision-making, such as beliefs, social norms, values, emotions and self-efficacy (Marcinkowski & Reid, 2019; West, 2015). Refer to Table 1 for definitions on some of these key concepts. So far, it is unclear to what extent these theoretical concepts are reflected into practice and thus, questions remain about the ways in which EE can lead to conservation success (Ardoin et al., 2020).

Additionally, research is limited in context and audiences. A significant amount of research is still located in the USA, despite the increasing number of examples across the globe, including the Global South (Ardoin et al., 2020; Norris & Jacobson, 1998; Thomas et al., 2019). Generally, there is limited documentation of practitioners' perspectives, with some exceptions of research conducted in the UK (West, 2015), USA (Ardoin & Heimlich, 2013; Schusler et al., 2009, 2017) and Costa Rica (Jiménez et al., 2017).

Table 1. Relevant concepts and sociopsychological theories(*) on learning and behaviour change, together with core EE outcomes (^) (sensu Clark et al., 2020). For an expanded version refer to CII: Table 2 & CIII: Table 1.

Concept and Definition	Main chapter
Behaviour change and action^: from concrete environmental actions (e.g. planting trees, restoring a natural habitat), to behavior change in general and lifestyle changes (Adapted from Clark et al., 2020)	CIII
Bridging strategies^: strategies or outcomes from another field or area that can have a synergic benefit with EE goals. Include human health (family planning and hygiene practices), access to education and literacy, institutionalization of EE and law enforcement (Adapted from Clark et al., 2020)	CIII
Cognitive domain of learning: "what we know", centered upon the acquisition of knowledge and the development of intellectual abilities and skills (Bloom et al., 1956)	CII, pathway I
Cognitive domain^: the knowledge-based domain that range from access to information, knowledge and understanding, and awareness of environmental topics (Adapted from Clark et al., 2020)	CIII
Collective Stewardship: collective conservation-oriented actions to physically enhance local environments, like planting trees, enhancing wildlife habitat or participation in wildlife monitoring (Larson et al., 2015)	CII, pathway IV
Connection to nature^: importance of experience in and interaction with the biophysical environment, to foster positive attitudes towards nature and emotions such as love for animals in their natural habitat (Adapted from Clark et al., 2020)	CIII
Economic aspect^: economic aspects including circular, work-life experiences and alternative livelihoods (Adapted from Clark et al., 2020)	CIII
Emotional connectedness to nature: feeling of being emotionally connected and belonging to the natural world (Frantz & Mayer, 2014)	CII, pathway II
Environmental health^: improve environmental health, from improving the status of a particular species or ecosystems, securing the well-being of nature in general, and reducing environmental pressures (Adapted from Clark et al., 2020)	CIII
Individual and community empowerment: increased control over lives and livelihoods, including control over natural resource management, or increased land-tenure security (Oldekop et al., 2016)	CII, pathway III
Information deficit model*: oldest and simplest model of pro-environmental behavior. Assumes a simplified linear path: increasing environmental knowledge leads to a positive attitude, which in turn leads to pro- environmental behavior (Burgess et al., 1998)	CII, pathway I
Self-efficacy: belief in one's ability to succeed in specific situations or accomplish a task (Bandura, 1977)	CII, pathway III
Skills and competencies^: psychomotor and skill-based domain of environmental literacy; includes action competence. Skills range from from very concrete skills like learning how to plant a tree to very general ones such as social and leadership skills to to manage natural resources (Adapted from Clark et al., 2020)	CIII
Social and cultural aspects^: improve social and cultural aspects of the community or wider society (Adapted from Clark et al., 2020)	CIII
Social capital: a set of prescriptions, values, and relationships created by individuals in the past that can be drawn on in the present and future to facilitate overcoming social dilemmas (Ostrom & Ahn, 2010)	CII, pathway V
Theory of planned behavior*: attitudes, together with subjective norms and perceived behavioral control, influence behavioral intentions which in turn shape our actions (Ajzen, 1991)	CII, pathway II
Value-norm-belief theory*: describes the impact of personal values in determining a personal norm, to act in environmentally protective ways (Stern et al., 1999)	CII, pathway II

Calls to contextualise interventions

As mentioned earlier, there are increasing calls to frame conservation strategies from locally relevant perspectives, as a response to mainstream conservation that has often clashed with local needs, values and knowledge (Dressler et al., 2010; Kashwan et al., 2021; Pascual et al., 2021; Sterling et al., 2017). Education projects are no exception (Bowra et al., 2020; Scully, 2012; Smith, 2014).

Since the Tbilisi Declaration (UNESCO, 1977), several frameworks have been defined to establish a common vision for EE, such as the WWF Global Environmental Education Programme (Huckle, 1988), the UNEP Strategy for Environmental Education and Training (UNEP, 2005), and the UNESCO Roadmap on Education for Sustainable Development (UNESCO, 2020a). Similarly, these guidelines coexist with the desires of finding generalizable solutions and the potential to scale-up interventions (Mickelsson, 2020). However, many environmental educators declare that environmental stewardship is neither an innate nor universal value, but it depends on the context where it is learnt and taught (Reid et al., 2021). On these lines, researchers have questioned the idea of standard education proposals designed for a diversity of countries and cultures, as they imply risks of imposing concrete perceptions of the world and its problems as universal (De Andrade & Sorrentino, 2014).

In Global South countries, EE is generally not incorporated into the national curricula and thus, depends almost entirely on local initiatives and projects led by NGOs (Andresen et al., 2020; Sherrow, 2010; Shrestha, 2015). National education systems of countries with important colonial legacies remain strongly influenced by Eurocentric viewpoints and are distant from local cultural realities (Bowra et al., 2020; Hardman et al., 2008; Hohenthal & Minoia, 2022; Kayira, 2015). Projects led by NGOs reflect similar trends, often projecting Western environmental values (Smith, 2014; Ward-Smith et al., 2020). In these lines, my review of education programmes (Box 1) suggest that education programmes adapt their content to the local context to some extent, and their focus is generally on ecological topics. Local communities are involved in some way, but I found very few examples of the meaningful involvement of local communities in decision-making roles. Similarly, I found very few examples were the inclusion or consideration of local knowledge was mentioned. To date, there are only few scattered examples of culturally grounded education initiatives in conservation contexts in the peer-reviewed literature (e.g., Chandra, 2022; Nesterova & Jackson, 2019; Rozzi et al., 2006; Walter, 2009).

There is compelling evidence that transformative change is needed to tackle the root causes of the global biodiversity crisis (Díaz et al., 2020; IPBES, 2019). Increasingly, researchers are advocating for the adoption of rights-based and socially-just conservation models to enable the needed transformative action (Pascual et al., 2021; Reyes-García et al., 2022). Education

is recognized as a key intervention for transformative change (CBD, 2022). Yet, as exemplified by the results of my systematic review (Box 1), there is still uncertainty whether EE is – or can be – a strategy to make conservation interventions more effective, equitable and just. Given the complexity and multiple scales of current socioenvironmental challenges, one of the remaining key questions is how an initiative such as EE is implemented in practice in diverse local social, political, and cultural contexts (Larsen & Brockington, 2018) and whether EE programs are imposing universalized priorities, cultures, and themes (De Andrade & Sorrentino, 2014).

These questions are particularly relevant in Global South countries which are increasingly the target of global conservation efforts (Adenle et al., 2015; Shen et al., 2023), often experiencing the legacies of colonial conservation of spatial exclusion and silencing of local voices (Kashwan et al., 2021; Saif et al., 2022). For this reason, the core of this thesis focuses on environmental education in Madagascar, as an example of a Global South country. Madagascar offers a unique context to answer some of these questions due to its outstanding levels of both biological and cultural diversity. Current threats to its unparalleled rates of endemism are deeply rooted in historical and social contexts (Ralimanana et al., 2022; Razanatsoa et al., 2021). Consequently, policy efforts are critically needed to address the precipitous decline of biodiversity together with the urgent economic and social development challenges (Jones et al., 2019).

CONTEXT: MADAGASCAR

Madagascar, a conservation spotlight

Madagascar is the fourth largest island on Earth. It is located in the Indian ocean, 420 km off the coast of Mozambique, and it separated from mainland Africa about 160 million years (Goodman, 2022). Madagascar is a global priority for conservation due to its unparalleled rates of threatened endemic species (Mittermeier et al., 2011; Myers et al., 2000). For example, Madagascar has 107 endemic species of lemurs (20.5% of all primate species), and approximately 96% of those are listed as threatened by the IUCN list (Estrada et al., 2022). For centuries, the unique fauna and flora has made Madagascar a dream destination for biologists, and it is currently a selling point for international tourism, which represents a vital source of revenue for the country (Jones et al., 2019).

Madagascar has made commendable efforts to safeguard its collective natural heritage (Gardner et al., 2018). Despite this, the country's extraordinary biodiversity is still threatened by overexploitation (including hunting, collecting for subsistence and trade) and land clearance for agriculture (both small-scale slash-and-burn agriculture and cash crop production) (Ralimanana et al., 2022). While a simplified widespread narrative has reduced the causes of environmental degradation to poverty and population growth (Scales, 2014b), environmental threats are increasingly linked to indirect drivers such as political and social insecurity, corruption and weak governance (Jones et al., 2019; Ralimanana et al., 2022; Vieilledent et al., 2018, 2020).

Despite the country's biodiversity wealth, Madagascar is a poverty-stricken country (Gardner et al., 2018) that faces urgent economic and social development challenges possibly intensified by climate change (Dröge et al., 2022; Weiskopf et al., 2021). Madagascar ranks amongst the lowest countries in the Human Development Index (2021) and the Food Security Index (2019). A large proportion of Madagascar's population, more than 28 million in 2021, live in rural areas often close to protected areas (INSTAT, 2021; Ralimanana et al., 2022). In those rural areas, most households rely on small-scale agriculture or farming as their main source of income, while also depending on natural resources as an important livelihood asset (e.g., food, fuel, shelter) (Fritz-Vietta et al., 2011; Neudert et al., 2015; Ward et al., 2018b).

For decades, Madagascar has been under the conservation spotlight, attracting research, conservation and development programs and investment, in an effort to alleviate poverty and conserve biodiversity (Ihemezie et al., 2021; Waeber et al., 2019). The establishment of a protected area network has been the principal conservation strategy (Ralimanana et al., 2022). The first protected area was established in 1927, and the network has been

continuously evolving since, and now covers 10.4% of the land area (Gardner et al., 2018; Ralimanana et al., 2022). Reflecting global conservation trends, the network started with a centrally-governed "nature exclusive" approach that gradually evolved towards a community-led "nature including humans" perspective (Gardner et al., 2018; Mace, 2014). In fact, it was one of the first countries in Africa to formally endorse a decentralised system of natural resource management (Gardner et al., 2018). Yet, the attempts to involve communities in the management of natural resources have often resulted in cultural clashes and conflicting agendas (Corson, 2017; Fritz-Vietta et al., 2011; Pollini et al., 2014). Despite decades of conservation efforts, Madagascar's biodiversity continues to face severe challenges, and widespread poverty and inequalities still persist (Ralimanana et al., 2022; Waeber et al., 2016). Under this context, issues of poverty, environmental justice, natural resource use and biodiversity conservation are complexly interlinked (Scales, 2014a).

Therefore, the context of Madagascar is exemplary of other biodiversity-rich countries striving to reconcile development and conservation objectives (Neudert et al. 2016). To illustrate this, we collectively built a participatory qualitative model (Box 2) of the natural resource use around Ranomafana National Park (South-Eastern Madagascar). The model exemplifies the complexity of drivers that influence biodiversity conservation, as well as the interwoven connections between conservation and development efforts (Waeber et al. 2016). Thus, this model reflects the context were most conservation NGOs work in Madagascar. Conservation-oriented NGOs are mostly engaged in both development and conservation projects, aiming at combining economic development with the protection of the environment, for instance, with projects targeted at improving agriculture techniques or diversifying livelihoods. At times, this may put NGOs in front of a dilemma between the narrow focus of environmental-oriented donors and the need to generate incentives for the local community to collaborate actively in conservation efforts (Aldashev & Vallino, 2019) and to compensate for conservation-imposed restrictions on local livelihoods (Rakotonarivo et al., 2017a).

BOX 2. FROM NATIONAL TO LOCAL CONTEXT: THE MATSI PROJECT*

Pierre, M. L.; Rafanambinantsoa, O. A.; Brias-Guinart, A.; Hariniaina, M.; Randriamamonjy, T. T.; Rojosoanotahina, C. J.; Vuola, M., 2021

> Methods in brief (refer to Methods & Appendix S2 for more details): participatory modelling (Etienne et al. 2011) that involved nine workshops following three phases: 1. Identification of the problem, 2. Creation of the model, 3. Validation of the model. The participants of the workshops were mainly two local communities, and others were invited occasionally.

The goal was to collectively create a model of the natural resource use around Ranomafana National Park. The qualitative model (see below) includes Actors (in blue), Resources (in yellow), Drivers (capital letters) and Interactions (arrows) influencing the natural resource use in that social-ecological system.

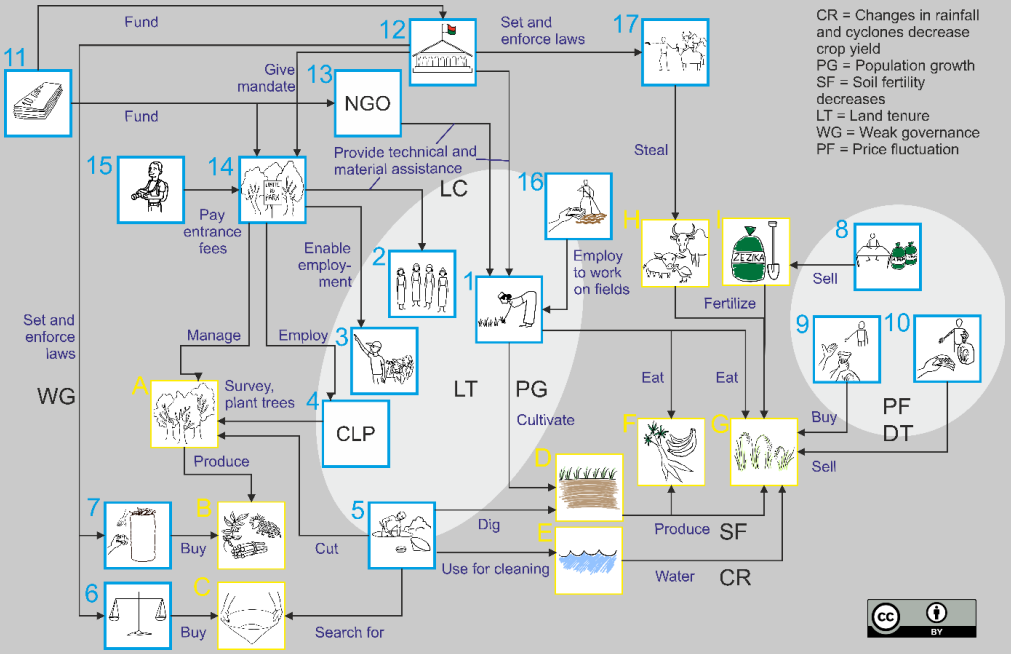

Complexity of social-ecological system. The model exemplifies that natural resource use and biodiversity conservation is much more complex than the simplified narrative that reduces the causes of environmental degradation to poverty and population growth (Scales, 2014b), although these elements appear in our model. Instead, our model reflects links to indirect drivers such as weak governance, lack of communication, price fluctuations and land tenure mechanisms. Additionally, it presents a wide diversity of actors that spread from the local scale including local communities, thieves, product buyers and sellers, all the way to the central government and international donors.

Wicked conservation and development problem. This model illustrates the interwoven connections between biodiversity conservation and development. During the creation of the model, different actors identified which was the main problem regarding natural resource use.

The answer of local communities was: "The land does not produce enough (in terms of quality and quantity) to support our families". Thus, the management of the national park is interlinked with access to markets, employment opportunities, law enforcement, climate change and soil fertility. Solutions proposed by local communities were training, provision of materials and funds, and protection against robberies.

From national to local context. Most education projects are implemented at the local or regional level. Thus, the MaTsi project provides an example of the social-ecological settings where education projects take place. Yet, we acknowledge the limitations of this model in capturing the whole complexity of all the villages around Ranomafana National Park, and even less of the rest of Madagascar.

A rich cultural heritage

Along with its unique biodiversity, Madagascar has also a rich cultural heritage. Malagasy ancestors from Africa and Asia colonized the island and formed permanent settlements for at least 2000 years (Allibert, 2008; Dewar & Richard, 2012), although the timing of the oldest human settlements remains a debated question (Douglass et al., 2019). The island was colonized at multiple times by immigrants of different origins and, as a result, Malagasy culture became a mosaic of diverse cultures that were modified by their interactions and adaptations to local conditions (Kistler & Spack, 2003; Ottino, 1974). For example, foraging is a key dietary source in the southwest dry forest, coastal fishing is important along the west coast, and semi-nomadic cattle pastoralism is a well-known feature of drier grasslands of the west and south (Dewar & Richard, 2012). At the same time, features of Malagasy culture, as well as their domesticated animals, crops and agricultural techniques, have been traced to regions bordering the Indian Ocean (Dewar & Richard, 2012).

Unlike most African countries, Madagascar has a sole national language: Malagasy (Dahl, 2011). Malagasy is an Austronesian language with numerous dialects that are region-specific and vary by ethnic descent (Dewar & Richard, 2012). The written Malagasy language is called *Malagasy ofisialy* and is, for historical reasons, based on the spoken language in the capital area (Dahl, 2011). The country remained a French colony for 63 years and gained its independence in 1960. During colonisation, French was generally the sole language of instruction beyond primary school. After independence, French has continued to be used by the ruling elite as the language of administration, and it was removed and then reinstated in the education system following a series of education reforms (Dahl, 2011; Howe, 2022).

Malagasy people are frequently assigned to 18 "ethnic groups", and this roughly corresponds to the division into dialects (Dewar & Richard, 2012). The most numerous groups are the Merina (northern central mountains), the Tsimihety (northern mountains), the Sakalava (western savannahs) and the Antandroy (southern dry lands) (Adelaar & Himmelmann, 2005). Yet, the historical origins and naming of these ethnic groups vary

and are often a product of Malagasy and European conquerors, or originated in recent political contexts (Dewar & Richard, 2012; Larson, 2000). In fact, ethnic identity is often permeable, and has different meanings for different groups (Harper, 2002). In addition, some ethnicities are not based on parentage but on life practices (Dewar & Richard, 2012). For example, the identity of the Vezo (southwest coast) is not a product of ancestry which people are born into, but a way of doing, which people learn and perform, for instance by learning the ways of the sea (Astuti, 1995).

The diversity of Malagasy culture is a reflection of the island's diverse climate and topography, and a dynamic product of the social and cultural history of the country (Dewar & Richard, 2012). Thus, Malagasy culture is interwoven with the natural world and there are many local communities (*Fokonolona* in Malagasy) that maintain intergenerational connections to place and nature through their livelihood activities, cultural identities, worldviews, institutions, and ecological knowledge (Estrada et al., 2022; Golden & Comaroff, 2015b; Porcher et al., 2022). Extensive research has described the local knowledge of children and adults across Madagascar on a range of domains such as wild edible plants (Porcher et al., 2022), medicinal plants (Randriamiharisoa et al., 2015; Razafindraibe et al., 2013), land-use practices (Fritz-Vietta et al., 2017; Mariel et al., 2021) and specific plant or animal species (Carrière et al., 2017; Rocha et al., 2021). Over time, local communities have developed a rich and complex system of customary institutions, locally known as *fady* (taboos) and *dina* (community conventions), that regulate their living together, alongside their natural resource use (Golden & Comaroff, 2015a; Jones et al., 2008; Rocha et al., 2021). Thus, many of the country's landscapes and territories have been conserved by local communities and are vital to their ways of life (Rasolojaona et al., 2021).

This cultural heritage is threatened by changing social-ecological contexts. Several studies document the erosion of customary institutions in Madagascar, including the loss of spiritual values underpinning sacred sites (Fernández-Llamazares et al., 2018), changes on wildlife consumption taboos (Golden & Comaroff, 2015a; Jenkins et al., 2011), and erosion of collective memory related to particular faunal groups (Rocha et al., 2021). Some of the phenomena that have been claimed to drive social transformation and cultural dissolution are migration, modernization and spread of Western religion (Gardner et al., 2013; Golden & Comaroff, 2015a). At the same time, conservation discourses are increasingly recognizing the role of these customary institutions, such as sacred sites and taboos (Fernández-Llamazares et al., 2018; Jones et al., 2008; Randimbiharinirina et al., 2021), even though these institutions exist for other reasons beyond biodiversity conservation (Kaufmann, 2014; Rutte, 2011). Paradoxically, certain conservation interventions, such as forest use restrictions, may affect local communities' identity, which might imply important cultural losses (Llopis et al., 2021; Rakotonarivo et al., 2017b).

Glimpse of the school system

The Malagasy education system follows the structure of the francophone systems and is divided into: préscolaire (pre-primary, 3 years), primarie (primary, 5 years), collège (lower secondary, 4 years), and lycée (upper secondary, 3 years) (Ministère de l'Éducation Nationale, 2017). Although the five years of primary education are compulsory (UNESCO, 2020b), this does not always guarantee school attendance (Glick et al., 2005; PASEC, 2017). The Ministry of National Education (MEN) is represented at the regional level (DREN), at the district level (CISCO) and at the commune level (ZAP). Madagascar has a public-private education system, with most of the students (71,4%) attending a public school, and the highest proportion of students attending private schools located in the Antananarivo province (PASEC, 2017).

The formal educational systems presents a series of dysfunctions and equity issues, that are particularly aggravated in rural and public schools (PASEC, 2020). In 2018, the primary school completion rate was only 56% (and 24% for lower secondary school) and thus, primary school education remains the sole form of education for many children, particularly in rural areas (Reibelt et al., 2014). Additionally, there are high levels of out-of-school children, particularly in rural areas, either because they dropped out early or because they never enrolled (Gubert & Robilliard, 2008; PASEC, 2017). Challenges of the education system are manifold, including poor infrastructure and resources, shortage of qualified teachers, distance to school and affordability (Niens et al., 2021; PASEC, 2017; Venart & Reuter, 2014). In rural areas, the lack of qualified teachers leads to a reliance on community recruited teachers (generally called FRAM, as they are recruited by associations of parents or FRAM). In most cases, FRAM teachers do not have any previous pedagogical training, and their compensation ranges from receiving a salary, to an allowance, or food (PASEC, 2017). For a historical perspective of the school system in Madagascar see Reibelt et al. (2017) and Dolins et al. (2010).

AIM AND OBJECTIVES

In this thesis, I examine the role of EE as a conservation strategy in the context of Madagascar, particularly focusing on understanding practitioners' narratives, and the potential of EE to make conservation interventions more effective, equitable and just.

In particular, I aim to address the following objectives:

- Explore the status quo of education as a tool for biodiversity conservation in Madagascar

What are the key characteristics (e.g., actors, target, learning tools, etc) of EE in Madagascar in the context of biodiversity conservation? How are education programmes evaluated? To what extent do they adopt an inclusive approach? Does the status quo in Madagascar reflect global patterns and gaps?

- Understand practitioners' narratives on the role of EE in the context of biodiversity conservation

According to practitioners in Madagascar, how does education influence conservation? Do they consider a single way in which EE influences conservation? Or are there multiple pathways? Do practitioners align with a simplified linear path, focusing on knowledge and attitudes? Or do education programmes reflect theoretical advances on the factors that influence human behaviour and decision-making?

- Describe the contextual elements that influence the purpose of EE

What are the differences and similarities in the purpose of EE between Finland and Madagascar as illustrative of a Global North and a Global South country? Do the goals of EE in these two countries reflect different sociocultural contexts? Or do EE initiatives impose certain Western-led values and concrete perceptions of the world as universal? Can standard education proposals be implemented in a diversity of contexts and cultures?

- Examine the opportunities for biocultural approaches to EE

Could EE be an approach to enhance both biological and cultural heritage? How should biocultural approaches to EE be defined? Which elements and dimensions of current EE initiatives in Madagascar align with biocultural approaches? Which aspects could be further developed? What are the limitations of the biocultural lenses in a Malagasy context?

In addition to these scientific objectives, I aim to advance the following practical objectives:

- Adopt ethical research practices throughout the research process
- Ensure that the results of this thesis are available, accessible and understandable to conservation practitioners for the use in their own projects

To address the mentioned objectives, my research resulted in four articles that form the chapters of this thesis. Each of the mentioned scientific objectives corresponds principally to one of the chapters, with inputs and connections to other chapters as well, and each chapter includes its own research questions. The four chapters build upon each other. Chapter I explores the status quo of the phenomena and determines research gaps that are addressed in Chapter II and III. Chapter II aims to understand practitioners' narratives on the role of EE in the context of biodiversity conservation. Chapter III describes the contextual elements that influence the purpose of EE. Throughout the first three Chapters, I identify a general lack of culturally grounded approaches. Therefore, Chapter IV addresses this question further, assessing existing initiatives and the possibilities for biocultural approaches.

This thesis focuses on the context of Madagascar, as an example of a Global South country with high priority for biodiversity conservation in which poverty and natural resource dependence represents an acute challenge. In terms of geographical scope, my research examines the national level, with examples of education programmes across Madagascar. Yet, I also obtained in-depth insights into several education programmes to understand the local and regional context in which they take place (Box 2, Table 2). Exceptionally, Chapter III introduces Finland as a point of comparison, to provide an opposite case from the Malagasy context (Figure 1). Finland is chosen as a global leader on education, in which EE has historically been part of the formal curriculum.

This project examines non-formal EE activities (Figure 1). Those that are not determined by the schools or the standardized school curriculum, but rather tailored to the organizations' needs and interests. Thus, I targeted conservation NGOs and other organizations, such as associations, that conduct EE programmes throughout Madagascar. Yet, I acknowledge that the lines between formal and non-formal education are fuzzy, and, in some cases, organizations designed their activities to align with the school curriculum, or conducted their activities in school buildings, during or after school hours. Additionally, in Chapter I examine briefly the status of the formal EE as well (Figure 1).

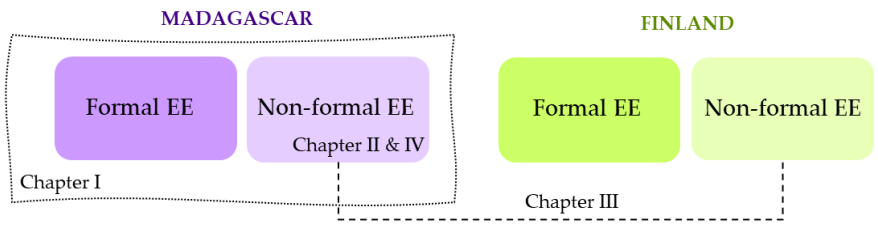

Figure 1. Diagram representing the scope of each of the chapters. Chapter I examines both formal and non-formal EE in Madagascar, whereas Chapter II and IV focus exclusively on non-formal EE. Chapter III compares the views of non-formal EE practitioners in Finland and Madagascar.

METHODOLOGY

My journey

In the process of doing a thesis, there are many experiences that are often not reflected in any of the articles, or in the thesis summary. Yet, these are experiences that deeply influence your choices along the process, and who do you become after those years. For this reason, I made the conscious decision to explain my own journey in the following section that takes the format of a travel journey. A more reflective section on my own research process is found in the Discussion.

Beginnings

It is not easy to define a starting point for this journey. In a way, there are a myriad of experiences that may me start this PhD: hiking as a child with my family, or my role as an educator in a hiking centre in Catalonia. However, if I had to establish a turning point, it would be my experience in a conservation project in Dindéfélo (south-east of Senegal). It was 2015, and we decided to design an education programme. Our approach had similarities with many NGOs I would meet later on: we were enthusiastic about the power of education, absolutely believing that was a lasting way to make people understand the interconnection between protecting chimpanzees and protecting their own families.

After my return from Senegal, I kept thinking about that education programme: to what extend were those education programmes useful? Was there anything incongruous about a group of foreigners educating a group of Senegalese people on how to behave in their land? What role had the local community in all that? It was then I realised I had found what I wanted to research about. I started looking for funding, and I finally started my PhD at the beginning of 2018.

Dipping my toes in qualitative social science

My initial research plan was strongly influenced by my background as a biologist. I was determined to do a quantitative impact evaluation of the long-term social-ecological impacts of education programmes. But then, two things happened: I attended the Global Environments Summer Academy (Global Diversity Foundation), and I did my first fieldwork.

During the Summer Academy I was exposed to concepts of justice, equity, spirituality and transformation. After that, I felt uncomfortable with my research plan: I was not so interested anymore in finding "numbers". I wanted to understand first, and to include the perspective of local communities: how were those education projects supporting local communities? I realised this question had been growing inside me since Senegal but that,

somehow, my own background as a natural scientist would not accept it as an interesting – or valid – research question.

The much anticipated first fieldwork to Madagascar arrived. I travelled together with Marketta Vuola, who was planning her own PhD at that time. Marketta had a background in development geography and political ecology, and she had been to Madagascar before. Neither of us had a fixed plan but were open to meeting different people and increasing our understanding of our topics of interests. Thanks to Marketta, I realized that asking questions, and especially listening, could also be a research method. Unintentionally, she opened my eyes on a new way of doing research and, slowly, I started to dip my toes in the adventures of doing qualitative social sciences.

Immersed in Madagascar

Early 2019, I started dreaming with burning energy about my second fieldwork, while I began to write my first article (CI). The second fieldwork was an opportunity to immerse myself in the country for five months and conduct a more structured data collection.

My arrival to Madagascar coincided with the Annual meeting of the Association for Tropical Biology and Conservation. Those were intense days for the conservation arena in the country: President Andry Rajoelina had just been elected, and the science community signed the Ivato Declaration (2019) to call attention to the threats faced by the island nation's unique biodiversity and its people. On a personal level, the summit allowed me to expand my network with Malagasy researchers and conservation practitioners. I spend the next two months in the capital Antananarivo, conducting in-depth interviews with practitioners (CII), while I mastered the art of using Malagasy public transport (Brias-Guinart, 2022b).

After those months, I moved to Ranomafana, together with Marketta, Nirina Rafanambinantsoa and Matthieu Pierre, two Malagasy master students with who we would work together those next months, and long after. My plan was to start a pilot study for the evaluation of education programmes. At the same time, we conducted the MaTsi project together with Marketta (Box 2), which involved a lot of adaptation to changing plans, quite a lot of walking, spending nights in schools, and buying kilos of lychees to share with participants. The MaTsi project did not belong to neither Marketta's or my thesis and, at some point, we questioned whether it was worth it all the effort we spent on it. It was only months after that we realized how important it had been to spend those days listening to local communities to understand the complexity of conservation.

The Covid Paralysis - adapting to externalities

It was 2020, and I was already imagining my third and final period of fieldwork that would build from all the contacts and understanding gained during the last two years. But then,

Covid came. The initial astonishment at seeing the world shutting down turned into frustration, as I understood that there was not option of going back to Madagascar anytime soon. I was aware that plans could change along the thesis, but I guess that no one could have prepared me enough to be ready for the uncertainty that Covid brought. Through a painful process, I understood I had no other option than to change my plans.

Fortunately, I was supervising the master student Markus Högmander at that time. He was planning to use the same method I had used in Chapter II in the Finnish context. I realized that was an opportunity to plan a completely new article (CIII) that would compare Finland and Madagascar.

At the same time, we gathered a group of researchers and practitioners to start planning a meeting with EE practitioners across Madagascar. The team was composed by: Matthias Markolf and Hanitra Markolf Rakotonirina (Chances for Nature), Lena Reibelt (Madagascar Wildlife Conservation), and later on, Lovasoa Razafindravony (Chances for Nature) and Rio Heriniaina (Vinako for Madagascar).

We knew an in-person meeting would not be possible for a while, so we decided to take advantage of the online momentum to hold a series of online monthly meetings. Organising those meetings was an emotional outlet for me. An opportunity to plan towards something despite the global situation. A time to dream and share our passion for EE. A space that made me feel connected with the issues and challenges in Madagascar, even if I was thousands of kilometres away.

Suddenly, it was already 2021. A year had gone by, without knowing exactly how. I was starting the fourth year of my PhD, which also meant it was my last year of funding. My hopes to go back to Madagascar were on hold, and I was feeling I still had energy ahead to lead one last project. But, which one? I was still holding to my in-depth qualitative approach, but it was difficult to plan what to do, without knowing whether there was the option to go back or not.

Finally, I planned a hybrid project (CIV) that capitalized on the relations and insights from the monthly online meetings. The project would start with an online questionnaire and would have the option to be complemented with follow-up interviews, either online or in person.

New layers of understanding

The online questionnaire went live at the beginning of 2022. Fortunately, I had managed to secure a grant for one more year. And finally, it became real: the frontiers of Madagascar were open, so I was going there again after almost three years. Even if I felt that my thesis was not yet quite finished, that was probably my last trip and thus, my opportunity to "give back". This translated in a research brief that summarized the main results of my

thesis (Brias-Guinart, 2022a). The process made me reflect on the work of the last years, and to understand what the most relevant findings for practitioners were.

The first weeks in Madagascar came with the usual intensity of periods of fieldwork. The data obtained with the online questionnaire felt somehow limited, and very far from reality, so it was my chance to do some follow-up interviews, which helped me to appease my desire to understand further. At the same time, I was immersed in the preparation of the in-person workshop with EE practitioners, that finally took place in Ranomafana. The workshop was like a dream: being able to be in the same physical space with all those people we had been meeting online, discussing in person for two days. As part of the workshop, I had the opportunity to present a glimpse of my research, and to distribute the research brief.

After those hectic days, another part of the adventure started. Together with Lovasoa (Responsible of EE at Centre Valbio), we visited two conservation organizations on-site: Chances for Nature in the Kirindy Forest (Morondava), and Blue Ventures in Ambanja and NosyBe. Those days were eye-opening for me. It was an opportunity to see those education projects in action. I realized the diversity of layers of understanding that there can be of the same topic, and the various lenses that can be used in research. It was definitely not the same to use online questionnaires, or interview practitioners about their projects, or experience them in person. Those visits helped me reflect not only of the results from the last project, but of the overall thesis in general. I could have never planned for a better way to close the chapter of my thesis.

Research design

The complexity of current human-environmental problems requires to transcend traditional academic disciplinary boundaries (Norström et al., 2020) and to create synergic research-implementation spaces beyond the divide between research and practice (Knight et al., 2006; Toomey et al., 2017). During this thesis, I engaged and learned from different disciplines, particularly on the fields of EE and conservation social sciences. Thus, this thesis builds on the need to embrace social sciences in conservation (Bennett et al., 2017; Moon & Blackman, 2014; Sandbrook et al., 2013) and thereby supports transformations towards more effective, equitable and just interventions (Massarella et al., 2021; Shackleton et al., 2023).

This thesis adopts principally a qualitative research approach, with some quantitative data in Chapter IV, building on the rise in qualitative social science in conservation research (Moon et al., 2016). Thus, it seeks to define and understand complexity and to provide an in-depth understanding of the phenomena (Creswell, 2009). Additionally, qualitative methods (e.g., interviews) are appropriate for exploring participants' perspectives,

involving different levels of discussion between interviewer and interviewees, facilitating the emergence of unexpected insights (Newing et al., 2011). For this reason, I used participatory methods to understand practitioners' perspectives (theory of change in Box 3).

Throughout the thesis, different conceptual frameworks are used that have been defined in detailed in each of the chapters. Box 3 introduces an overview of the main frameworks that have not been previously defined in the Introduction.

BOX 3. CONCEPTUAL FRAMEWORKS IN THE ARTICLES

Core outcomes for the EE field. Core outcomes are operationalized as a change in the environment or in people's engagement with or actions on the environment (CIII). In particular, "core" means it is a centrally important outcome of EE (Clark et al., 2020, p.384). The article by Clark et al. (2020) presents that North American EE professionals and leaders came to agreement on the core outcomes for the EE field, described as: (1) environmentally related action and behaviour change, (2) connecting people to nature, (3) improving environmental outcomes, (4) improving social/cultural outcomes, (5) learning environmentally relevant skills and competencies. Clark's framework is used as a tool to frame the analysis and discussion in Chapter III.

Theory of change as a research tool. A theory of change is an explanation of how and why an initiative generates a particular change (Belcher & Claus, 2020). Inspired by the work of Krasny (2020), theory of change is used as a participatory research tool to identify how EE activities lead to intermediate and long-term outcomes in Chapter II and III.

Biocultural approaches to EE. Defined in Chapter IV as "EE initiatives that are built on place-based cultural perspectives, capitalizing on local cultural priorities, values, knowledge and worldviews, and recognize feedbacks between humans and the ecosystems (adapted from Sterling et al., 2017). Thus, Chapter IV conceptualizes biocultural approaches to EE around four themes: (1) place-based learning approaches, (2) local realities, (3) bio-cultural relations, and (4) inclusive conservation.

Overall, while this thesis adds valuable new perspectives to the field of EE and conservation, it is more of an empirical study than a theoretical one. As such, my priority was to bring forth the perspectives of EE practitioners rather than to go deeper into theoretical discussions. That said, this thesis establishes a dialogue with existing theories and attempts to characterize the concept of biocultural approaches in the context of EE.

Data collection methods

This thesis builds on 5 years of long-term engagement with EE practitioners in Madagascar since 2018, including eight months of in-depth field-based ethnographic work. Overall, this thesis draws on different sources of information and a diverse set of methods. Across the research project, the main data collection methods have been interviews (both in-depth and

semi-structured), questionnaires, on-site visits and literature insights. Table 2 provides an overview of the different methods adopted beyond the literature insights, and Figure 2 locates the places mentioned throughout the thesis. To avoid repetition, the detailed description of these main data collection methods, including the data analysis and their limitations, are presented in the corresponding chapters. Additionally, I have undertaken other activities and interactions (such as workshops and participatory modelling) that were essential to ensure a meaningful research design, and comprehensive interpretation of the results. These complementary activities are not described in depth in any of the chapters and thus, they are described below.

Table 2. Overview of the diversity of methods used.

	Method	Topic	Target	Geographical focus	References
2018	In-depth interviews	Status quo of EE	Key informants: (i) civil society, (ii) government (iii) NGOs, (iv) researchers (v) primary school, (vi) local communities, (vii) participants	Madagascar	Chapter I
	On-site visits	Status quo of EE	4 conservation organizations	Ranomafana, Andasibe, Ivoloina, Alaotra	Chapter I
2019	Semi-structured interviews	Theory of change of education projects	15 conservation and education organizations	Madagascar	Chapter II
	On-site visits	Theory of change of education projects	4 conservation and education organizations across Madagascar	Andasibe, Ivoloina, Ranomafana,	Chapter II
	11 workshops	Plurality of views on natural resource use	Local communities and conservation stakeholders	Around Ranomafana National Park	Pierre, et al., 2021
2020	Semi-structured interviews	Theory of change of education projects	16 conservation and education organizations	Finland	Chapter III
2021-2022	10 workshops (online)	EE tools, topics and challenges	EE practitioners + Ministry of Education representatives	Madagascar	Lemur News, 2021
2022	Questionnaires (online)	Biocultural approaches	89 questionnaires 61 individual education projects	Madagascar	Chapter IV
	On-site visits	Biocultural approaches	3 conservation organizations	Ranomafana, Kirindy, Ambanja	Chapter IV
	Semi-structured interviews	Biocultural approaches	8 practitioners + 2 researchers	Madagascar	Chapter IV
	2-day workshop	Exchange of good practices and evaluation	EE practitioners + Ministry of Education representatives	Madagascar	Chapter IV
	Research brief	Giving back thesis main results	160 booklets distributed amongst EE practitioners	Madagascar	Brias-Guinart, 2022a

Ethnographic approach and participant observation

I lived in Madagascar for eight non-consecutive months spread throughout 2018, 2019 and 2022. The longest consecutive period was five months in 2019. During half of that time, I lived in the capital Antananarivo. The rest of the time I lived in the village of Ranomafana, in the guest room of my Malagasy colleague and friend Lovasoa, who is the Responsible of EE in Centre Valbio. During those weeks, we shared some household tasks, including buying groceries in the local market and preparing food with a charcoal stove, while practicing Malagasy. Additionally, I did overnight stays in remote villages (reachable only by foot) around Ranomafana National Park and Andasibe (2018, 2019), were I had the opportunity to participate in a range of activities including rice cultivation, food preparation and fetching water.

Over the years I had the privilege to visit different education projects, some of them several times. The organizations that offered me the opportunity to visit them were: Madagascar Fauna and Flora Group (Ivoloina), Association Mitsinjo (Andasibe), Madagascar Wildlife Conservation (Alaotra), Centre Valbio (Ranomafana), Chances for Nature (Kirindy), Explorer Home (Maromizaha) and Blue Ventures (Ambanja) (Figure 2). Those visits were an opportunity to observe the social-ecological context in which the education programmes were conducted and, in some occasions, to experience first-hand the education project per se. An exceptional experience was the participation in the Sciencing Out Program (led by ExplorerHome) in 2019, that involved camping for five days in the Maromizaha Forest with high school students. Additionally, in 2022, I had the unique opportunity to join the three-days environmental camp in Kirindy (led by Chances for Nature) and participate in the World Mangrove Day in Nosy Be, including a mangrove reforestation and a carnival (thanks to Blue Ventures). Additionally, during those interactions I acquired numerous written materials, such as Malagasy policy instruments (e.g., *Plan Sectoriel de l'Education*, *Plan Communal de Développement de la Commune Rurale de Ranomafana*), education project reports, and education materials.

Except for two trips in 2018, the rest of the trips across the country (at least 16) to visit the different education projects were done using public transport (*taxi brousse*). Even if this was initially a forced decision due to limited budget, I soon realized it was also an opportunity to understand the country. Thus, those interminable trips, occasionally involving up to 24 hours in far from comfortable seats, became the window to discover the diversity of landscapes, architectural styles, cuisines, and climates across the country.

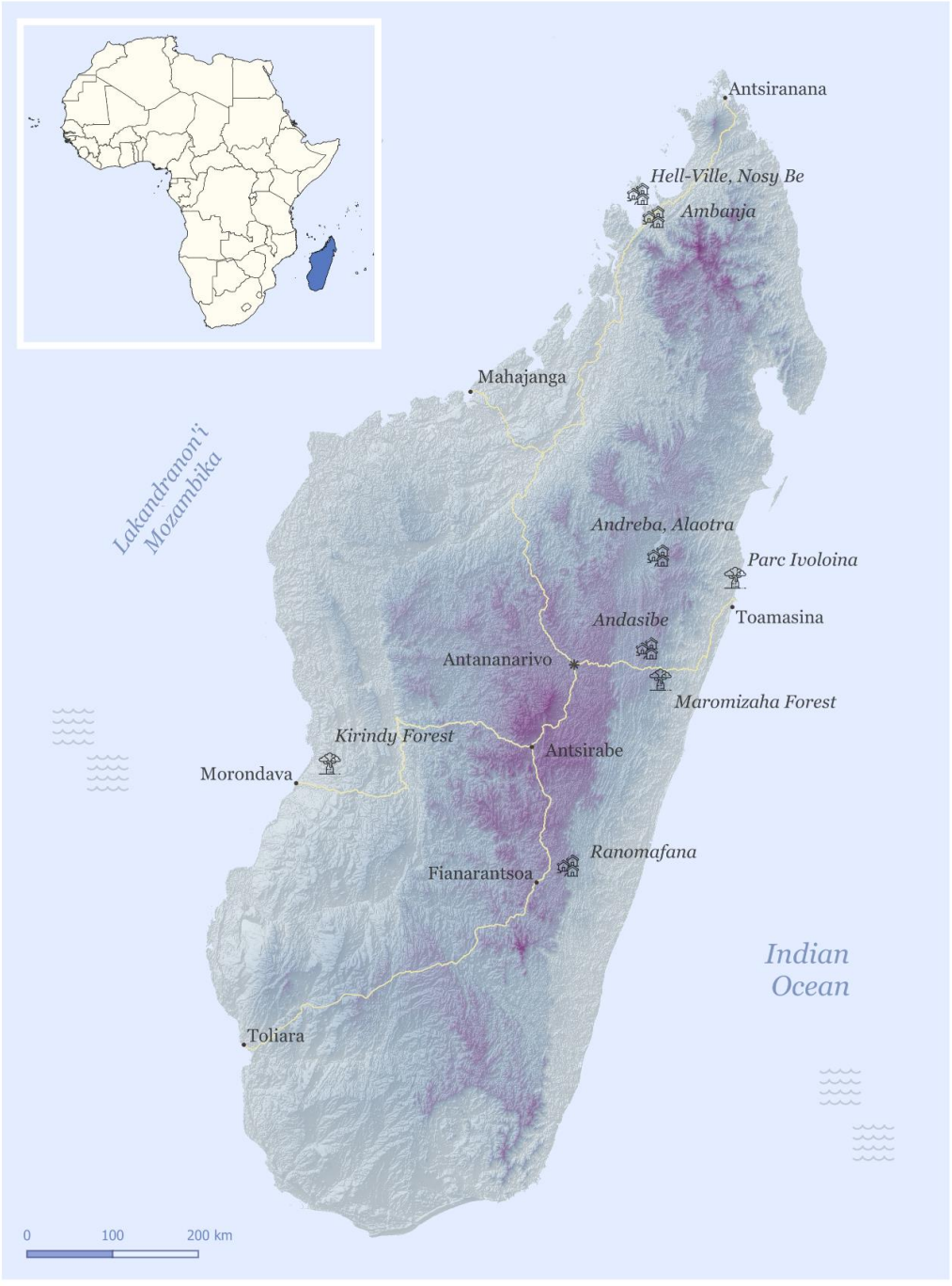

Figure 2. Map of Madagascar. In italics, visited places mentioned throughout the thesis. [Author: Amaia Gonzaga Roa]

My ethnographic approach was deeply benefited from learning Malagasy language. My level of Malagasy was never good enough to conduct research in Malagasy on my own. When interacting with practitioners, we often spoke in English or French. And, when this was not possible, a research assistant facilitated the translation from and to Malagasy. Yet, knowing a bit of Malagasy benefited hugely my interactions, as I could at least introduce myself and have some basic conversation in Malagasy before switching to another language. Additionally, learning Malagasy was really helpful for daily life: asking for directions when using public transport, buying and bargaining, etc. At the same time, learning Malagasy was a doorway to understand Malagasy culture and diverse worldviews.

Workshops

We (Lena, Matthias, Hanitra, Rio, Lovasoa and me) co-organised a series of 10 online workshops and a two-day in-person workshop (2021-2022) for EE practitioners in Madagascar. Workshops have long been used as a research methodology to fulfil both participants' expectations to achieve something related to their own interests, and to produce reliable and valid data (Ørngreen & Levinsen, 2017). Yet, in this case, the workshops were not designed intentionally as a data collection tool but rather as a learning and exchange space for EE practitioners.

The general structure of the online workshops was: there was one organisation presenting an education project or tool, and then there was an open discussion and sharing with the rest of the participants. Each workshop lasted around 1h and 15 minutes and had, on average, 17 participants from 14 different organisations. These series of workshops culminated with the two-day in-person workshop in Ranomafana that focused particularly on evaluation, with 46 participants from 34 organisations.

My participation in those workshops, mostly as an active listener, was essential to build my connections with the community of EE practitioners in Madagascar, and to understand practitioners' needs, motivations and struggles on the practice of EE. Thus, it allowed me to continue my ethnographic approach while being away from Madagascar, and enriched my understanding of the social, historical, cultural, political, and economic factors that affect EE.

Participatory modelling

Together with Marketta Vuola and a team of Malagasy co-researchers (Matthieu, Nirina, Maria, Toky and Caroline), we conducted the MaTsi project (*Mampifandray ny Tsirairay*) that is described in Box 2. The goal of the project was to collectively build a conceptual model of the natural resource use around Ranomafana National Park. For that, we

followed the methodological framework developed by Etienne et al. (2011), as well as similar work done in Madagascar by Reibelt et al. (2018).

This approach, called ARDI, is based on series of participatory workshops that lead to the co-construction of a shared "conceptual model" of the main components and drivers of change in a given natural resources management setting (Reibelt et al., 2019). In a dialogical process, the participants share their own reality (i.e., their perceptions of the system at hand, and how it works), and identify and clarify the key elements of their territory: Actors, Resources, Drivers and Interactions (ARDI) (Bodonirina et al., 2018).

The model was built in three phases: 1. Identification of the problem, 2. Creation of the model, and 3. Validation of the model. In total, it involved the organization of eleven workshops, some of them duplicated to allocate women and men in separated groups. The workshops were mainly conducted with local communities from two villages around Ranomafana National Park (Mangevo village/Vohimarina area and Amboditanimena village). Additionally, there was an expert group formed by conservation and development NGOs, local associations, government representatives, Madagascar National Parks, and Malagasy researchers. More details about the project can be found in Appendix S2.

Methodological principles to ensure quality

In this section I reflect on the four commonly used criteria to ensure quality and assess the trustworthiness of qualitative research: credibility, transferability, dependability, and confirmability (Guba, 1981) by embracing some of the strategies advocated by Shenton (2004) and Moon et al. (2016).

Credibility, a type of internal validity, concerns the extent to which the findings are congruent with reality, for example, by representing the actual meaning of the research participants (Lincoln & Guba, 1985; Merriam, 1998). Before the start of this thesis, I was not familiar with the Malagasy context and I had never been in the country. Thus, I committed myself to develop an early familiarity with the participants before defining my whole research agenda. For this reason, I started the project with an exploratory trip that concluded with Chapter I. From then onwards, I established a prolonged engagement with practitioners as described in the data collection methods. Additionally, I co-authored with several people from different nationalities (Malagasy, Finnish, Spanish, German) which became an asset to understand cultural contexts, particularly for Chapter III and the Finnish setting. On top, the collaboration with these co-authors allowed for opportunities for scrutiny of the project, which was also enriched by being part of a diverse and active research group (Global Change and Conservation Lab) that provided space for discussion and reflection.

Transferability, a type of external validity, refers to the extent to which findings described in one study are applicable or useful to other contexts (Lincoln & Guba, 1985; Merriam, 1998). Yet, as it happens often in qualitative research, it may not be possible, or even desirable, to demonstrate that the findings are generalizable or applicable to other populations according to quantitative standards (Moon et al., 2016). Instead, following Bassey (1981), I provide an extensive description of the context and the boundaries of the study, to allow the reader to decide whether the findings can be applied to another setting and whether the recommendations can be useful for practitioners elsewhere.

Dependability refers to the consistency and reliability of the research findings and the degree to which research procedures are reported, enabling future researchers to follow, critique and repeat the work (Sandeloswski, 1986; Shenton, 2004). Yet, this may be problematic as researchers' observations are tied to the situation of the study, the published findings are static and frozen in the ethnographic present, whereas the phenomena has a changing nature (Florio-Raune, 1991; Marshall & Rossman, 1999). For this reason, detailed coverage of the methodology should allow future researchers to repeat the work, if not necessarily gain the same results (Shenton, 2004). This thesis draws on difference sources of information and a diverse set of overlapping methods. Additionally, I provide a careful description of the overall research design of the thesis, including its limitations, and each chapter includes a detailed description of the step-by-step methodology (e.g., CII: Figure 1; CIII: Figure 3), including description of the participants and how they were chosen.

Confirmability refers to the extent to which the findings are the results of the experiences and ideas of the research participants, rather than the characteristics and preferences of the researcher (Shenton, 2004). I include in this thesis a section reflecting on my own positionality, and how this had certain impacts on the data collection process and subsequent data interpretation.

Ethics

This research was approved by the Ministry of Environment and Sustainable Development in Madagascar (9 July 2019, 182/19/MEDD/SG/DGEF/DGRNE; and 7 December 2021, 436/21/MEDD/SG/DGGE/DAPRNE/SCBE.Re) and adhered to the Code of Ethics of the International Society of Ethnobiology (ISE, 2006). Additionally, I submitted a request to the Ethical Review Board in the Humanities and Social and Behavioural Sciences of the University of Helsinki, and they issued an ethical review statement (13 June 2019) clarifying that there were no institutional requirements from the University of Helsinki for ethical clearance (TENK, 2019).

The research was undertaken in accordance with the General Data Protection Regulation of the European Union, and I informed participants about our ethical guidelines with a

written form (Appendix S3). Additionally, the project was conducted under a strict and careful process of Free Prior and Informed Consent. Participation in the study was strictly voluntary. Interviews, on-site visits and workshops were conducted following the principles of empathy and active listening to the participants, recognizing practitioners as experts in their own right. Additionally, I acknowledge that everyone with whom I interacted was potentially guided by different agendas, values and sociocultural contexts from my own, even in those occasion where we shared the ambition to conserve biodiversity (Brittain et al., 2020). Despite written consent is a common practice to demonstrate consent, it may not always be the most adequate procedure (de Koning et al., 2019). For this reason, during visits to remote villages, instead of written consent, I obtained first oral consent from village leaders, and then from community participants (as advised by the Canadian ethic guidelines (2022)). Additionally, when visiting those villages and on-site projects, I explicitly embodied respect for community protocols and customary laws.

Referring back to one of the practical objectives of this thesis, I have long reflected on research ethics along this journey, with the commitment to adopt responsible conduct throughout the entire research process, and with the intention to implement ethical principles and practices in concrete and meaningful ways (Bannister, 2018). In addition, throughout the process, I strived to reduce, when possible, power imbalances between researchers and participants (Bhan, 2014; Brittain et al., 2020). These aspects are discussed further in the Walk the talk section (page 53).

Positionality

I next reflect on how my positionality determined my research interests and outputs, as suggested by Neely & Nguse (2015).

I am a white woman in her thirties, originally from Barcelona, and studying in a Nordic institution. In general terms, Malagasy people do not have any preconceptions about Finland, or the University of Helsinki per se, with two exceptions. The University of Helsinki has been conducting field courses for more than 10 years in Centre ValBio (Ranomafana), and several Finnish researchers have been doing research there. In addition, Association Mitsinjo (Andasibe) has been funded for many years by the Finnish Association for Nature Conservation (*Suomen luonnonsuojeluliitto*). Thus, in these two regions, coming from the University of Helsinki had certainly a weight. In Centre ValBio, it definitely facilitated interactions with staff members, and it was much easier to organise fieldwork. With Association Mitsinjo, it was unclear at times whether they perceived me as an part of the Finnish funding organisation, instead of an independent researcher.

Madagascar has a colonial history and, consequently, conservation may still be perceived at times as a colonial imposition (Kiik, 2019). My appearance as a white European woman could be easily confused by a French person. However, when I started to speak, it was immediately clear that French was not my mother tongue and thus, I was removed from the colonial heritage between Madagascar and France.

Despite my attempt to transcend traditional academic disciplines, by background in conservation research certainly influenced the data collection process and subsequent data interpretation. At the same time, it certainly facilitated interactions with conservation practitioners, as it was easier to relate to their topics of interest and understand their jargon.

This thesis has also been a personal journey to define my identity as a researcher, that reflects the ongoing debates in conservation research and the growing consideration to social sciences (Shackleton et al., 2023). Throughout these years, I have transitioned from a background in biology (strongly dominated by natural sciences) towards an interdisciplinary and people-centred approach (Bennett et al., 2017; Mace, 2014). Because of the fundamental differences in the way natural and social science research are conducted, I have occasionally found myself insufficiently prepared for the methodological and ethical challenges that arise during social research (St John et al. 2016), and have sought support in training courses, as well as colleagues and co-authors.

Except when I was based in Antananarivo, I never worked alone. I had the privilege to be accompanied and share my work with two Malagasy woman: Nirina (in 2019) and Lovasoa (in 2022) and collaborate with other Malagasy researchers: Matthieu, Toky, Caroline, Maria and Fitiavana. Working with a team of Malagasy colleagues certainly facilitated the understanding of the context, as well as benefited interactions with others. Being a woman, and working with a woman colleague made it easier to interact with other women, specially in remote villages. However, I acknowledge that these collaborators, despite being Malagasy, they were not local from those area and thus, the social and cultural contexts may differ significantly from their own (Kiik, 2019).

Additionally, I have not written any of the following chapters alone, but always with an epistemically, culturally, and disciplinarily diverse group of authors, working at the intersection of conservation, environment and education. We each bring varied perspectives to this work, based on our personal and professional experiences, including our academic training in agroforestry (BR), conservation (AB-G, MC, RH, and LoR), development studies (AP), ecology (MH), ecology and science education (TA), biology and EE (LeR), ethnobiology (AF-LL), social sciences (CR) and sustainability (KK-K). Additionally, three of the co-authors are Malagasy (LoR, CR and BR) and the rest are non-Malagasy individuals with expertise on the conservation context of Madagascar and close

ties with the country, with the exception of one co-author (MH) that provided expertise in the Finnish context.

This thesis is the results of more than five years invested in building genuine relationships of trust with conservation practitioners and educators in the island. Yet, I acknowledge that value-based judgements are at the root of all research activities (Wilhere et al., 2012) and thus, that my analytical lenses are both shaped, facilitated and limited by my identity and the ones of my co-authors. Together with the rest of the co-authors, we have strived to present perspectives of the research participants as integrally as possible, to the best of our abilities. However, this thesis does not (and cannot) speak on behalf of the whole EE community working in Madagascar.

MAIN FINDINGS AND DISCUSSION

In this thesis, I examine the role of EE as a conservation strategy in the context of Madagascar, particularly focusing on understanding practitioners' narratives, and the potential of EE to make conservation interventions more effective, equitable and just. I explore different aspects in each chapter. Chapter I provides an overview of the status quo of EE in Madagascar, establishing parallels with global patterns, and identifying research gaps that are addressed in the following chapters. Chapter II identifies five pathways of change that illustrate EE practitioners' rationales behind education programs and establishes a dialogue with theoretical advances. Chapter III describes contextual elements that influence the purpose of EE by comparing the core EE outcomes of Madagascar, as a Global South example, with Finland, as a Global North case. Finally, Chapter IV defines biocultural approaches to EE and documents the potential to adopt this approach, by examining current practices, challenges and possibilities.

In the following sections I highlight the most interesting aspects of this thesis, following the structure of the main objectives set earlier (see Aim & Objectives section), relating to the scientific objectives first, and continuing with the practical findings. For more comprehensive discussion of all the aspects that may not be highlighted here, the reader is referred to the individual chapters. Each of the following sections corresponds principally to one of the chapters, with inputs and connections to other chapters as well.

Status quo: the role of NGOs as the main actors, lack of impact evaluation and overlooked inclusivity

This thesis starts by exploring the status quo of EE in Madagascar, with a particular focus on the context of biodiversity conservation. Concretely, it aims to understand whether the context of Madagascar reflects the patterns and gaps identified at a global scale (Box 1). Indeed, Chapter I describes the role of formal education and NGOs in the implementation of EE, identifies a lack of evaluation, and points out aspects of participation and inclusivity in the education programmes.

There is a strong will within the Malagasy government to integrate EE into its environmental and education policy, which is reflected in a range of promising policy plans to incorporate EE into the national curriculum (CIII, p.4). Recently, the Ministry of Education (MEN) and the Ministry of Environment (MEDD) signed an agreement of collaboration (Inter-ministerial Coordination Unit) for the implementation of the National Policy of Environmental Education (2022). Yet, in line with previous research (Niens et al., 2021; Reibelt et al., 2014), I found that strategies of EE within the current Malagasy school system are largely lacking in practice in schools. Therefore, the implementation of EE is

mainly in hands of NGOs and other non-governmental actors such as associations (Figure 3), reflecting trends outside Madagascar (e.g., Freund et al., 2019; Leeds et al., 2017). For this reason, the focus of my research is therefore placed on these non-governmental actors. Chapter IV expands on characterizing these education programs, by providing quantitative data based on 61 education programs across the country. As illustrated in Figure 3, most education initiatives target children and youth, they use a variety of learning tools and their focus topic-wise is diverse. Their geographical scope ranges from a single village to a whole region to nation-wise, and more than half are implemented in or around protected areas (Figure 3; CIV: Figure 2).

Shared narratives among practitioners hold that education benefits conservation, and that EE is an essential component to foster community involvement in the protection of Madagascar's natural heritage. Yet, reflecting trends outside Madagascar (Box 1), studies investigating long-term impacts of these education programmes are scarce (for some exceptions, see Balestri et al., 2017; Rakotomamonjy et al., 2015; Richter et al., 2015). In addition, the assessment of education programmes is often restricted to output indicators, such as the number of students reached, or the number of materials distributed (e.g., Razafindravony et al., 2023). Those fewer organisations that conduct short-term evaluations, generally focus on outcomes such as knowledge and attitudes. Additionally, not all organizations that conduct evaluations publish their results in scientific journals, but they may stay as internal reports.

An especially noteworthy result from Chapter I is the signs of a general lack of inclusive approach in the design, planning and implementation of EE interventions, despite differences amongst organisations in the extent of participation of local communities, local authorities and local teachers. This result reflects the general trends of the conservation agenda in Madagascar (Corson, 2017; Scales, 2014b) and beyond (Milupi et al., 2017; Pascual et al., 2021).

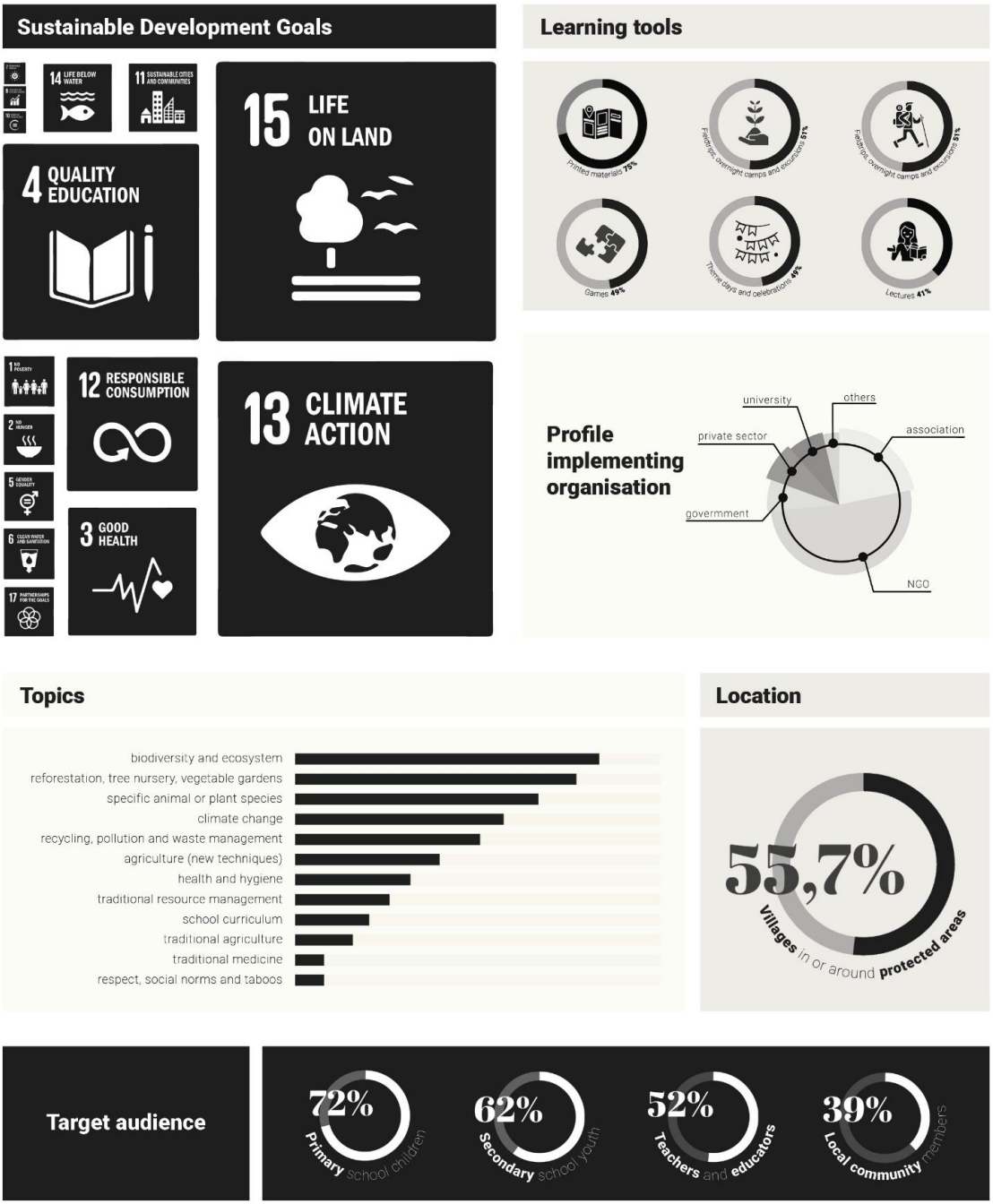

Figure 3. Infographic on the key characteristics of EE programs in Madagascar, including: a) Sustainable Development Goals targeted by the education initiative, b) learning tools, c) profile of implementing organisation, d) topics, e) location and f) target audience (Modified version from Brias-Guinart, 2022a). [Graphic designer: Mar Guinart González]

Overall, Chapter I builds on and complements previous work on EE in Madagascar (e.g., Dolins et al., 2010; Niens, 2022; Ormsby, 2008; Reibelt, 2017; Schüßler et al., 2019). While previous research has generally focused on certain geographical regions, such as Alaotra (Reibelt et al., 2014) and SAVA region (Niens et al., 2021), this thesis adopts a national scale, including examples across the country, and thus complements the literature review done by Schussler et al. (2019) which also reports education initiatives across Madagascar. Additionally, previous thesis in this topic (Niens, 2022; Reibelt, 2017) have focused on primary schools, and the potential to further incorporate EE into the school curriculum and teacher training. However, instead of primary school, this thesis focuses on non-formal EE and the role of NGOs, who are currently implementing most of EE initiatives. Additionally, this initial chapter identifies two main gaps that will lead the focus of the following chapters. First, the need to understand the extent to which education programs are having an impact and through with pathways, and second, the need to understand the potential of culturally grounded approaches.

Rationales behind environmental education beyond knowledge and attitudes

Building from the lack of exhaustive evaluation described in Chapter I, Chapter II investigates the narratives behind EE programmes, as a first step towards comprehensive evaluation. Five pathways of change emerged from the interviews with conservation practitioners. Each pathway illustrates particular rationales on how change happens from education interventions to the desired final goal: i. increasing knowledge, ii. changing emotions and traditional practices, iii. fostering leaders, iv. diversifying outcomes, and v. influencing the community and society (Figure 4). Additionally, these pathways align with sociopsychological theories on learning and behavioural change (Table 1, CII: Table 2). These results suggest that organizations base their practices – to a certain extent - on the UNESCO guidelines, very much focused on increasing pro-environmental knowledge and attitudes (Krasny, 2020). At the same time, the results also reflect theoretical advances calling for a dynamic and complex net of component to influence behaviour (Marcinkowski & Reid, 2019; West, 2015). These results do not present a single pathway as the most efficient but rather emphasize the need of a range of complementing pathways, echoing previous research (Ardoin et al., 2020).

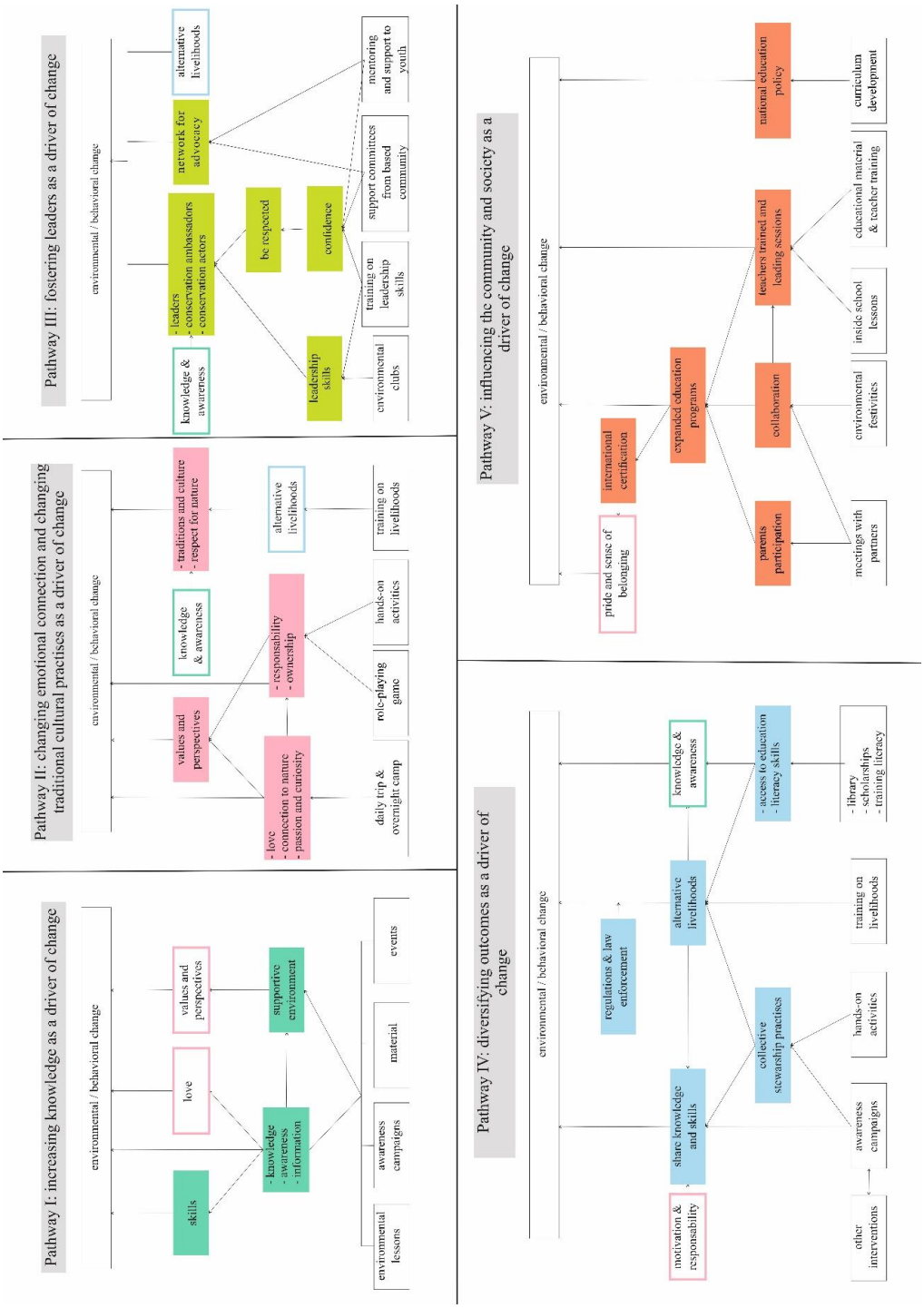

Figure 4. Pathways of change drawn from interviews with conservation practitioners (bottom row, activities; middle row, outcomes; top row, final goal simplified as environmental or social change; dark green, pathway I; pink, pathway II; light green; pathway III; blue, pathway IV; red, pathway V; solid shading, outcomes that constitute the rationale of the pathway; coloured bored, supporting elements from other pathways) (CII: Figure 2).

Interestingly, these results parallel, to some extent, the bicycle model on climate change education developed in the Finnish context (Cantell et al., 2019). Some of the elements identified in the pathways also appear in the bicycle model such as knowledge, thinking skills, values, and action. Similarly as the bicycle model, our results identified sociopsychological factors and contextual barriers that could prevent the success of the idealized pathways (CII: Table 1). Yet, there is at least one striking difference between the two models. The bicycle model presents the learner's identity, values and worldviews as the foundations for climate change education. By contrast, some interviewees in Madagascar mentioned the need to change cultural and traditional practices to achieve conservation goals. This finding nurtures the need to understand whether education initiatives are locally relevant, leading to Chapter IV. Additionally, these results raise the question whether the goals and priorities of EE differ in these two distinct countries, that guide the focus of Chapter III.

Overall, Chapter II represents an important advancement towards understanding the rationales behind the education programs, establishing a dialogue between theoretical concepts on sociopsychological theories on learning and behavioural change with empirical data from EE practitioners. In addition, this chapter contributes to the calls to evaluate EE (Ardoin & Heimlich, 2013; Nekaris et al., 2018). Evaluating the ways in which EE leads to tangible environmental improvement necessitates many steps, including the measurement of short and intermediate-term outcomes (Ardoin et al., 2020). Thus, having a clear understanding of the rationales of the education programmes is the first step towards identifying suitable outcomes for a more comprehensive evaluation of when and which pathways and interactions to promote. For many of the interviewees, it was their first time reflecting on the linkages between activities, outcomes and impacts. This reflects the context of EE in Madagascar, where lack of funds and pedagogical training lead to education programs being implemented without efficiency evidence or context-dependent design. Thus, understanding assumptions on how education works is key to design transformative initiatives. Despite this chapter provides novel insights that could be useful when conducting evaluation, I would also like to acknowledge that not all possible outcomes can be measured, and that there are a myriad of challenges that prevent organisations from evaluating their education programs as described in Box 4.

BOX 4. WHY IS EVALUATION SO HARD?*

Not everything that counts can be counted, and not everything that can be counted, counts. (Cameron, 1963)

Not everything can be evaluated: not all possible EE outcomes can be measured. For example, the participation in an overnight camp may bring a myriad of intangible benefits to the students that are beyond the scope of the program: such as the first time sleeping away from home, or spending three days with any household responsibility. Even if these outcomes cannot be measured, and sometimes may not even be intended by the organisers, they are still important as a result.

Crucial to identify suitable indicators: practitioners often lack the time, and often the training, to carefully reflect on the pathways between activities, outcomes and impacts. Yet, it is essential to consider how an education program works to be able to identify suitable indicators for evaluation.

Difficult to isolate the impacts of education: EE programs are often part of larger conservation projects (Ardoin & Heimlich, 2013; Trewhella et al., 2005). Thus, it is difficult to attribute impacts to individual education programs, as they often coexist with other complementary interventions aiming at similar outcomes (Penfield et al., 2014) such as alternative livelihoods, health and hygiene, and law enforcement programs (which may be anyway considered EE as shown in Figure 4).

External factors influence education outcomes: several factors influence change at the individual and societal level, and achievement of conservation benefits can depend on complex social, political, organizational and environmental factors outside the control of EE practitioners (Fitzimons, 2012). Thus, it is challenging to isolate the influence of education projects from external factors such as social norms, years of schooling, policies, law enforcement and corruption, and lack of market viability.

Easier to measure short-term changes: most popular evaluation methods focus on quantifying short-term changes in knowledge and attitudes using tests and questionnaires. But evaluating conservation success requires measuring long-term changes beyond knowledge and attitudes. Yet, desired long-term outcomes and ultimate impacts may not occur for years or decades, and can therefore be difficult to tie to these short-term outputs (Lavery et al., 2021).

Funders influence what is evaluated: the requirements of funders encourage organisations to choose tangible and easy quantifiable output indicators, such as number of participants, to prove the effectiveness of their program. Yet, these indicators may not meaningfully reflect societal or conservation impacts. At the same time, this may reflect different understandings between different actors on what constitutes impact (Raymond et al., 2010).

*This text is an expanded version from the one in Brias-Guinart, 2022a

Influence of context on the purpose of environmental education

In Chapter III, I challenge the idea of a universal agenda and generalizable solutions for EE, by investigating the role of context when defining the goals of EE. For this, I compare the views of practitioners working in Madagascar with those in Finland. Finland is chosen as an antithesis example, as it has a very distinct institutional landscape in terms of EE and natural resources (CIII, pg. 3). In this section, I will focus on the results relating to the Malagasy context.

In this chapter, I identify contextual elements that influence the purpose of EE in Madagascar. First, the collaboration with the formal curriculum may explain the emphasis on the cognitive domain in the results (Figure 5). NGOs in Madagascar often target schoolchildren, work in close collaboration with local teachers and public institutions, and teach lessons during or after school. Another plausible explanation for the focus on the cognitive domain may be the requirements of accountability between organisations and their funders. Funders' appraisals tend to focus on tangible and easily quantifiable measures and thus, organizations may see cognitive outcomes as objective measures to prove the effectiveness of their programs (Box 4).

Second, practitioners' discourses in Madagascar are influenced by Western epistemologies on nature/human relationships, often mentioning the lack of "connection to nature" as referring to a pristine and wild nature. These discourses seem to ignore a historical model of fortress conservation in which the establishment of protected areas have limited access to land and to natural resources (Scales, 2014a; Vuola & Pyhälä, 2016). Additionally, they emphasize the value of nature for its biological diversity while, far from a pristine ecosystem, many Malagasy people may see the forest as being essential for their dietary requirements, health, and a resting place for their ancestors (Fritz-Vietta, 2016; Scales, 2012). Similarly, most organizations had an ecological perspective of EE, with a scarcity of sociocultural outcomes (Figure 5). These results are in line with previous studies that recognize a lack of integrated social-ecological approach (Jenson, 2021). As discussed in Chapter IV, the focus on ecological perspectives could potentially be the result of international donor agendas, which are often strictly environmentally-oriented (Aldashev & Vallino, 2019; Eklund, Cheek, et al., 2022), as well as the availability of ready-made materials on ecological topics.

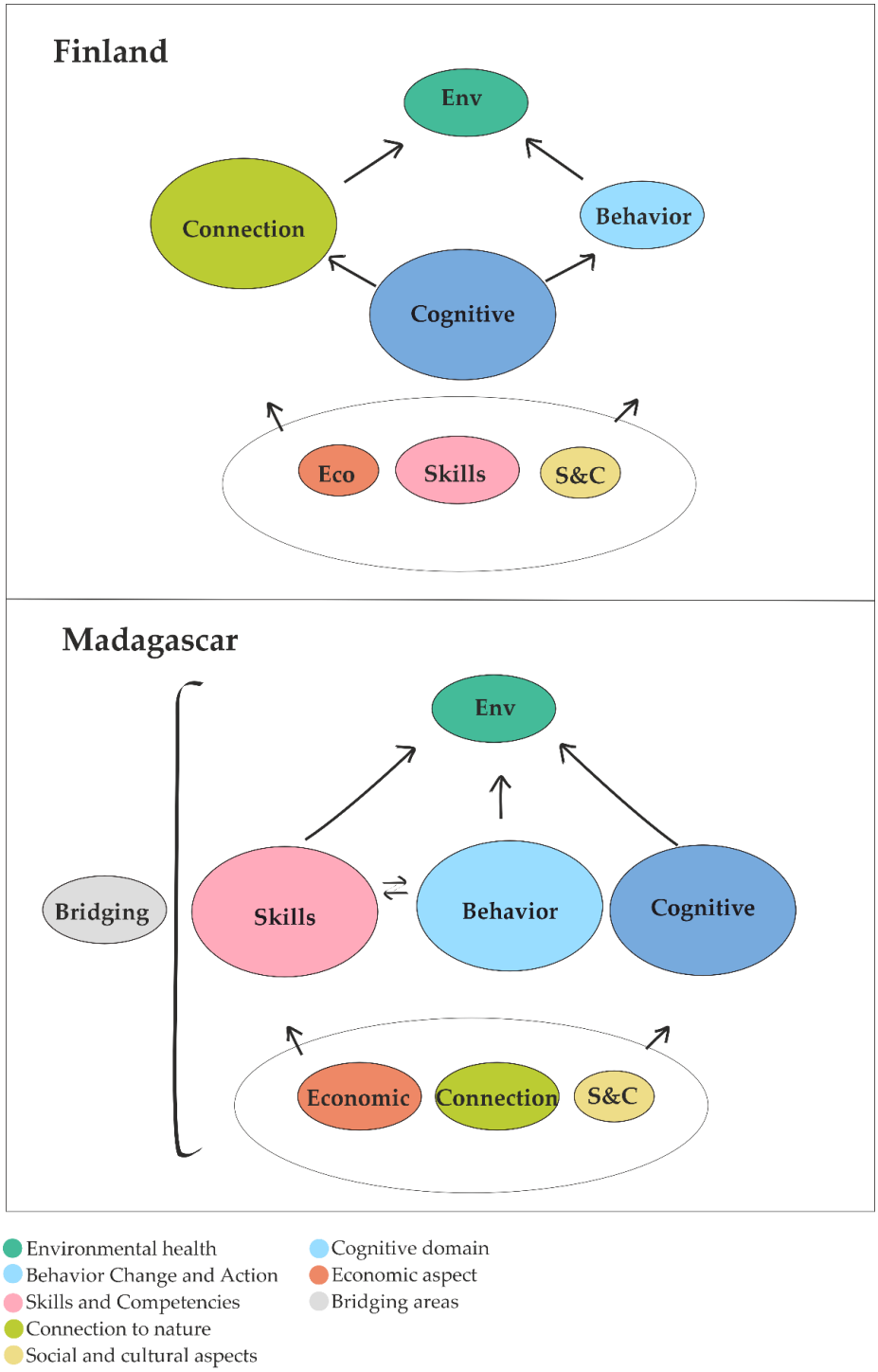

Figure 5. Graphical abstract of the core EE outcomes in Finland (on the left) and Madagascar (on the right) (see Table 1 for definitions of each core outcomes). The sizes of the bubbles indicate how often different interviewees mentioned that outcome (from small to big, less to more often) (CIII: Figure 5)

Both Chapter II and III illustrate that Malagasy practitioners have a broader understanding of EE, considering initiatives that would be less likely to be identified as "environmental education" in some other parts of the world, particularly the Global North, and would typically not be reported as EE outcomes for conservation (e.g., Ardoin et al., 2020). Thus, our interviewees mentioned as EE outcomes alternative livelihoods, human health and hygiene, institutionalization of EE, law enforcement and access to studies and literacy. This is further exemplified by the recent publication by Razafindravony et al. (2023) that presents as EE the *Madaworks project*, whose main goal is to financially support young women to continue onto high school, and the *Conservation Clubs*, that support alternative livelihoods projects amongst others. Recent works have also acknowledged a wider vision of EE. For example, Krasny (2020) describes health and well-being, together with positive youth development (including school achievement) as EE outcomes. Additionally, Clark et al. (2020) refer to human health, institutionalization of EE and economic aspects. These results reflect that EE in Madagascar is interwoven in the larger conservation and development field, and that the boundaries of what is consider EE are blurred. Similarly, previous research in Costa Rica (Jiménez et al., 2017) reports the integration of conservation and development in EE initiatives.

Overall, this chapter, together with Chapter II, provides insights into the debates on why we do EE, being one of the first attempts to illustrate perspectives of EE practitioners beyond the Global North (e.g., Ardoin & Heimlich, 2013; Clark et al., 2020; West, 2015). The outcomes of this chapter further question the idea of an universal agenda, and adds to the recognized need for decolonization of EE programs (Druker-Ibáñez & Cáceres-Jensen, 2022; McLean, 2013; Root, 2010; Velempini et al., 2018).

Towards culturally grounded environmental education

All the previous Chapters (I, II, and III) point out to a certain lack of contextualisation and inclusivity in some of the programs, identifying a need of culturally grounded education programmes. Chapter IV explores these questions in-depth, by discussing the potential to adopt biocultural approaches to EE in a Malagasy context as an opportunity to shift towards grounded, effective and equitable conservation efforts (Garnett et al., 2018; Tengö et al., 2021). Thus, Chapter IV examines the characteristics of 61 education projects across Madagascar through biocultural lenses.

Chapter IV starts by defining biocultural approaches to EE. The biocultural lenses are relatively new in the context of conservation. Previous research has established a set of guidelines to support the adoption of biocultural approaches (e.g., Gavin et al., 2015; Hill et al., 2019; Thompson et al., 2020), but none refer specifically to the context of EE. Thus, this chapter proposes a conceptual model with four key themes that define the characteristics of biocultural approaches to EE (Figure 6): 1. place-based learning approaches, 2. local realities, 3. biocultural relations and 4. inclusive conservation.

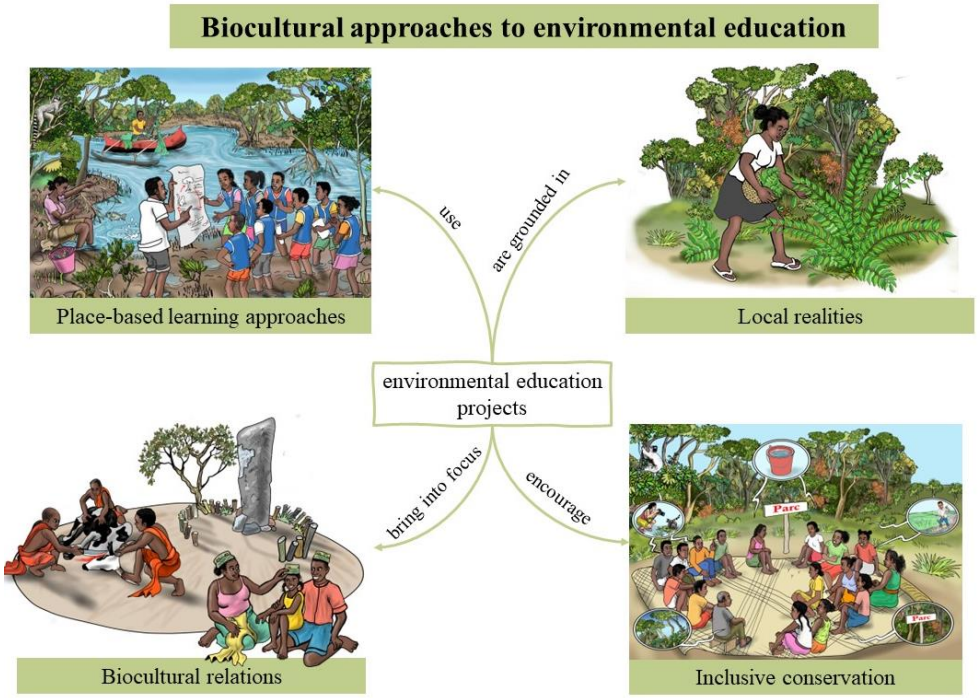

Figure 6. Conceptual framework on biocultural approaches to environmental education. Ideally, each education program would adopt the four themes, as they are interwoven amongst them. [Illustrations: Nady B. F. Ratsimbazafy, 2022]

Using this conceptual framework, Chapter IV examines the characteristics of 61 education projects across Madagascar. The results illustrate that education projects in Madagascar include certain elements and dimensions that align with biocultural approaches. For instance, education projects use a diversity of learning tools with a strong emphasis on fieldtrips and outdoor hands-on experiences, providing opportunities for experiential learning and encouraging affective bonds between the learners and the place. Additionally, the projects are often contextualized to local environments and daily life practices, and they commonly use local dialects, especially in written material. Furthermore, projects encourage hands-on participation in conservation activities and they are designed with community consultation.

While great advances are being made, the results also indicate that there is still a long way ahead to develop truly culturally grounded initiatives. For example, it remains unclear to what extend are nature-based experiences foregrounded on participants' lived realities and their sociocultural, historical and economic context. Similarly, the results do not necessarily indicate whether the projects begin with a clear understanding of local narratives, views and aspiration, and the use of local knowledge is limited. These results can be a consequence of the fact that most of the projects are led by external actors, and communities rarely have opportunities to be meaningfully involved in the design and implementation. Related to that, education projects are generally not designed to encourage meaningful dialogues or to ensure co-participation in conservation decision-making, despite many of them motivate youth to become environmental leaders in the future. Finally, our results suggest that only a handful of organisations celebrate the connections between the biological and the cultural heritage, while a discourse of blame and criminalization still persists connected to certain cultural practices such as slash-and-burn agriculture.

Overall, this Chapter contributes to the calls for documenting the potential of biocultural approaches to conservation (Burke et al., 2023; Gavin et al., 2015; Hanspach et al., 2020), being one of the first attempts to lay the groundwork on the context of EE. Thus, this research adds to previous studies that provided recommendations on how to support and cocreate grounded, effective and equitable biocultural conservation efforts (Fernández-Llamazares et al., 2021; McCarter et al., 2018; Tengö et al., 2017, 2021). A potential direction for future education project efforts may be the 14 identified Indigenous and Community Conserved Areas in Madagascar, all of which encompass rich and diverse natural, spiritual and sociocultural components and strong connections to place (Rasolojaona et al., 2021).

Rethinking the potential of environmental education

The two following sections summarize findings across chapters and reflect about them within the Malagasy context and beyond.

The limited impact of environmental education: a flea against and an elephant

As mentioned earlier, EE has been – and will probably remain – a cornerstone of many conservation projects, particularly in the Global South (Dietz & Nagagata, 1995; Freund et al., 2019; Jiménez et al., 2017; Leeds et al., 2017). Education has been recognized as a key intervention for transformative change in the context of the Global Biodiversity Framework (CBD, 2022), and is described by the UNESCO (2022) as: "*essential for the sustainable and equitable use of biodiversity and its conservation*". Similarly, many practitioners assume that education is the panacea to solve conservation challenges (Dietsch et al., 2017; Kobilinsky, 2017). At this point, I would like to take a step back and rethink whether education, per se, can make such a difference.

The lack of impact of EE is a recurrent topic, both in research and amongst practitioners. During the process of this thesis, the practitioners I encountered repeatedly mentioned their frustration for the lack of long-term results of their education efforts. As expressed by the Head of EE in one the National Parks: "*Despite all the efforts in EE, there has been no outcomes, because of poverty, or insecurity… How can EE be efficient?*". Another practitioner from an NGO, Responsible for monitoring, added: "*There are 40 NGOs working in conservation in Madagascar, and we usually ask ourselves the same: when should we educate? and to who? If we educate children, we will see the impacts in 20 years*". Some of these frustrations may be connected to evaluation difficulties (see Box 4). In addition, contextual elements may explain the lack of impact. As reflected in Chapter II, education programmes are usually underfunded and are led, in many occasions, by biologists with very good intent, but limited pedagogical training. As a consequence, educational approaches are often just copied from other projects without efficacy evidence or context-dependent design. At the same time, it is worth pointing at the fact that education initiatives are only a single aspect of the range of experiences, values, and learning processes that occur in the life of a person. For this reason, even if the education projects had been rigorously designed, according to the most updated socio-psychological theories, there would have been a range of contextual barriers that could potentially prevent those initiatives to reach the desired final impact, as identified by practitioners in Chapter II (CII: Table 1). Finally, the role of NGOs is conditioned by their bounded resources and geographies, that often narrow their interventions to a restricted number of school classes, or specific villages, limiting the scalability of their interventions (CI).

The limited number of culturally grounded approaches in EE programmes identified in our results (CIV), and in the broader literature (e.g., Chandra, 2022; Nesterova & Jackson, 2019; Rozzi et al., 2006; Walter, 2009), may be a reflection of the conservation context in general. In the context of Madagascar, communities rarely have opportunities to be meaningfully involved in conservation planning and implementation (Eklund, Cheek, et al., 2022). Power dynamics and historical relations in international development and conservation projects have certainly influenced the potential for community empowerment and the establishment of more participatory and bottom-up dynamics in conservation projects in Madagascar (Corson, 2017; Mirza & Perret-Clermont, 2016; Ward et al., 2018b) and elsewhere (Dressler et al., 2010; Larsen & Brockington, 2018). Similarly, lack of empowerment, low community participation and uneven distribution of benefits have been reported in conservation projects in other parts of the world (Milupi et al., 2017). These structural barriers have potentially prevented the existence of further locally-led projects (Eklund, Cheek, et al., 2022).

Education projects may have a skewed vision of drivers of biodiversity loss. As described earlier, most education projects in Madagascar target natural resource users which are generally communities living close to protected areas (Figure 3). Thus, most conservation organizations tackle with their interventions local drivers of biodiversity loss (St John et al., 2010). But it is important not to oversimplify and to be aware of the complexity of drivers of environmental change, such as the influence of external drivers and powerful elites (Box 2; Scales, 2014b). For example, rapidly changing threats (e.g. escalating mining pressures) are increasingly linked to organized crime and involve people far from local areas (Cabeza et al., 2019; Kappeler et al., 2022; Scales, 2014b). Even beyond that, many of the drivers of biodiversity loss in Madagascar may be intimately connected with elements that happen thousands of kilometres from the island, which are certainly beyond the control of organizations working at the local and regional level. For instance, demands of global cash crops have been identified as a major cause of deforestation (Vieilledent et al., 2020), moments of political unrest (e.g., due to national elections) increase the amount of fires in protected areas (Eklund, Jones, et al., 2022), and extreme climate events and environmental disruptions may increase livelihood uncertainty, specially to farmers, which may add pressures to the biodiversity (Stoudmann et al., 2019).

Environmental education for what? And for whom?

This thesis provides reflections on what should be the role of EE and whose needs should it meet, echoing the global efforts to shift towards rights-based and socially-just conservation models (Pascual et al., 2021; Reyes-García et al., 2022). Up to now, most education programs have answered the goals of the mainstream conservation agenda. Education programs have often been used as a tool to disseminate protected areas' benefits

and encourage local support to them (Western et al., 1989; CI). But, what if education programs could be a tool to address systematic inequalities and answer the needs of communities? Below, I compile the thoughts presented across different chapters rethinking the role of EE towards inclusive, culturally-rooted and locally meaningful education programmes (see Conclusions for more practical recommendations).

In general terms, two bipolar discourses on the role of EE (instrumental vs emancipatory, CIII) coexist in our results, reflecting global debates on the perspectives of EE (Fraser et al., 2015). A wide range of the interviewed NGOs related to an instrumental approach of EE. They focused on the transmission of scientific knowledge to change behaviours and solve environmental problems. By contrast, the results also identified alternatives to this instrumental tradition, with NGOs supporting an emancipatory role of EE (Sauve, 2005; Wals et al., 2008). This emancipatory approach requires a broader understanding of EE (Ardoin et al., 2020; Krasny, 2020) that expands beyond behaviour change and the narrow ecological focus, to a wider social-ecological system understanding, engaging with values, politics and other social dimensions (Bennett et al., 2017; CIII). For example, Chapter II highlights the empowerment of local communities to become environmental agents (pathway III in Figure 4). I claim that is essential that EE adopts participatory, inclusive and emancipatory learning approaches to allow individuals to address complex societal issues (Sauve, 2014; CII) and to meaningful participate in conservation decision-making. For example, Lotz-Sistika et al. (2017) describes transformative learning practical cases related to natural resource management that enhance both individual and collective agency in rural communities in southern Africa.

The adoption of the biocultural lenses would provide an opportunity for EE to recognize, support and celebrate the diversity of cultural and knowledge systems. Similarly, conservation discourses around the globe are recognising and promoting cultural practices that enhance biodiversity conservation, such as sacred sites and taboos (Dickman et al., 2015; Landim et al., 2023; Mgumia & Oba, 2003). However, adopting biocultural approaches to EE goes beyond making conservation "culturally compatible" (Dressler et al., 2010), but involves recognizing and building on existing relationships with land, both in scenarios in which positive relations between cultural practices and biodiversity exist, as well as in those with biocultural conflicts (Torrents-Ticó et al., 2022). The latter contexts will require opening space for dialogue (CIV) and engaging with a plurality of values and ethical perspectives (Cortés-Capano et al., 2022). In practical terms, education projects should begin with a clear understanding of local needs, views and aspirations (Sterling et al., 2017). This requires questioning the idea of external educators being the only powerful and knowledgeable experts (Skerrett, 2018). But instead, to consider youth as knowledge-holders and change-makers in their own right (Rabino, in prep.; Smith, 2014), to involve

community members (particularly elders) as active agents in education programs (CIV), and to enable community members to lead the design and implementation of education projects (Hill et al., 2019), which could be enhanced by shifting conservation funding to smaller, locally-led organizations (Wyborn et al., 2020).

Finally, I wonder whether future education efforts projects should be directed to enhance advocacy skills of those communities who maintain strong links with their territories, instead of reinforcing exclusionary conservation models. This thesis gives some insights into the need to decolonize EE practices (CIII & CIV), and support place-based rights, customary tenures, and Indigenous Peoples and local communities' efforts to address external and internal threats (Eklund, Cheek, et al., 2022; Rasolojaona et al., 2021, Jones et al. 2019). These reflections connect with the global calls on the need to adopt EE practices that address colonial legacies, challenging the assumption of EE being neutral and ahistorical (Korteweg & Russell, 2012). In these lines, some authors advocate for land education (*sensu* Bowra et al., 2020) as an approach that incorporates concepts of rights, sovereignty and justice (Lotz-Sisitka et al., 2017; Rodrigues & Lowan-Trudeau, 2021; Tuck et al., 2014). Additionally, land education actively recognizes, centres and honours Indigenous Peoples and local communities' rights, values, and worldviews (Korteweg & Russell, 2012; Tuck et al., 2014), contributing to the global calls to foreground Indigenous Peoples and local communities in biodiversity policy and practice (CBD, 2022; Dawson et al., 2021).

Walk the talk: reflections on my own research process

> "Before I was a professor, a researcher, or a student, I was just a person. And sometimes giving back starts with the ability of looking at another human being and giving with no agenda other than to say, thank you." (Finney, 2014, p.4)

In the following section, I provide some reflections on my own research process that echo some of the reflections on the education initiatives. These section answers the two practical objectives defined earlier (see Aim & Objectives section).

The struggles of giving back as an act of reciprocity

Since the beginning of the research, I struggled with ethical questions: how to adopt ethical research practices? How to ensure that my actions were not reproducing colonial structures but instead, decolonizing the research process? As reflected in our blog post (Vuola & Brias-Guinart, 2019), this is not an easy process, especially when it involves interactions across different worldviews, needs, expectations and values (Brittain et al., 2020).

Next, I would like to reflect on the strategies and practical actions I carried as an attempt to do research in concrete and meaningful ways, decolonize my research practices, and give back towards those with whom I interacted, especially Malagasy team members and EE practitioners. This section is inspired by the Special Issue by Gupta & Kelly (2014) that described experiences of field researchers in sub-Saharan African. In broad terms, giving back can be described as a reciprocal act, and it connotes having already received something from the person one is giving to (Gupta & Kelly, 2014). Similarly as those field researchers, I surrender to the feeling of being unsure – or even embarrassed - about my actions. For this reason, I do not expect in any case that these reflections become guidelines for future researchers but, it is rather a process of self-reflection on my own contributions.

Asymmetrical power dynamics

Communication between local communities and protected area managers, and genuine participation is rare in Madagascar both in the conservation context in general (Eklund, Cheek, et al., 2022; Vuola & Pyhälä, 2016) and in EE in particular (CIV).

The final workshop of the MaTsi project (Box 2) brought in the same room representatives from NGOs, associations, PA managers, researchers with local villagers. Marketta and I envisioned the workshop as a collaborative and participatory space, an opportunity for all but particularly for the local villagers to discuss one to one on the issues related to their territory.

Indeed, the workshop gathered a diversity of actors, all in the same room, and speaking the same language. Yet, it was extremely hard to communicate. It appeared that they did

not (or did not want to) understand their different priorities, problems and proposed solutions related to natural resource management.

We had wanted, naively, to utilise our power and privilege as researchers to replace top-down dynamics. Yet, this produced a paradoxical situation: we had unintentionally reproduced those same dynamics by "forcing" to have a workshop, expecting that this would be enough to change the asymmetrical power dynamics embedded in history (Mirza & Perret-Clermont, 2016). Thus, a potential starting point in the future could be to recognize existing historical relationships before the intent to promote bottom-up initiatives (Mirza & Perret-Clermont, 2016). Recently, radical listening (*sensu* Tobin, 2009) has been implemented in the context of conservation as a methodology for community engagement that shifts the center of power to the community, and creates space to understand others' viewpoints without seeking to change them (Allgood et al., 2019; Webb et al., 2022).

Building a research team: from translators to active contributors

Research assistants play a critical role in the success of research (Brittain et al., 2020). Yet, there are few guidelines on how to identify the adequate candidate, and how to build an active research team. When we started to work together with Nirina, we spent the first week familiarizing ourselves with each other and the project, solving doubts and questions and planning together for the next month. Additionally, we discussed about Nirina's expectations on what she was hoping to learn, which was essential to set some common ground and find synergies amongst my personal project and her interests.

The team grew bigger with Marketta and Matthieu. Training and becoming a research team was an intense, exhausting and rewarding process. Marketta and I tried not to just teach them to mechanically reproduce research methods, but to build their capacities to understand and contribute to the project in substantive ways. This became apparent as the project continued. Nirina and Matthieu were able to lead many initiatives based on their own understanding of the process, and many of the decisions were taken as a team.

Ownership of the research

The data from the MaTsi project (Box 2) was collected thanks to the efforts of a bigger research team, specially Nirina and Matthieu. Until then, Marketta and I, as overseas researchers, had carefully followed the official Malagasy requirements of having a national student or researcher associated with our projects. Yet, when returning to Finland, it was unclear what should happen next. Suddenly, the ownership of that data had become exclusively ours and, somehow, only Marketta and I had the power to decide what to do with it.

An opportunity came when international conferences moved online due to Covid, which made their attendance much affordable. We realized that was a unique chance for Nirina and Matthieu. We proposed them to become the owners of the work, and present as first authors at the International Conference of the Association of Tropical Biology and Conservation, together with the support of the wider Malagasy team, Maria, Toky and Caroline, and us. They were thrilled.

An interesting journey started. Marketta and I realized that what is often taken for granted as European researchers is commonly unattainable for Malagasy researchers. Most of our Malagasy colleagues had never participated in an international scientific conference. Thus, it meant weeks of zoom meetings (often dealing with limited internet connection), accompanying them on the process to write an abstract and prepare for a conference presentation, involving other lab members in Helsinki for a mock presentation. The conference arrived and Nirina and Matthieu gave the presentation (Pierre et al., 2021). It was a great learning process and a truthly rewarding experience for all of us.

Career advancement

In many ways, field researchers' careers are built on the shoulders of those who help us collect data, offer the data we need and guide us on how to navigate the places where we do fieldwork (Gupta & Kelly, 2014). My career was certainly advancing thanks to my experiences in Madagascar, and hugely thanks to those who had helped me on the process, particularly Nirina and Lovasoa. But, how could I equally contribute to their career advancement?

Making the most careful assumptions, I believe that my interactions with Nirina helped her to finalise her master thesis by finding a right supervisor. Additionally, during our stay in Centre Valbio, she was often the one leading interactions with other researchers and technicians, as she was already familiar with the place. Months after, she was offered a position there. I imagine that our stay there partially facilitated this, by increasing her visibility and network, although this would have never been possible without her skills and experience.

Earlier this year, Lovasoa told me she wanted to do a PhD on EE and if I could support her. On one side, I felt totally unexperienced to advise her on how to do a good research proposal. On the other, I soon realized it was in my hands to use my own privilege. I had done my PhD studies at the University of Helsinki, and I have had the chance to attend courses and have had a good supervision. Since then, I have been accompanying Lovasoa in the process of obtaining a PhD position at the University of Fianarantsoa (Madagascar).

Accessible results

In many research settings, giving back means the dissemination of the study results, with the intention that, sooner or later, the research will contribute to the future well-being of the local communities (Paksi, 2020). Following that logic, each time one of my articles was published, I send a personalized email to all those who had contributed to the article, either as interviewees or as research assistants, to say thank you, and give the opportunity to share thoughts about the article per se. Despite efforts to provide an abstract in French, I soon understood that the scientific jargon was often too incomprehensible for many of the practitioners.

Thus, I designed a research brief that summarized the main results of my thesis in plain language and was translated in French and Malagasy (Brias-Guinart, 2022a). I presented and distributed 160 copies of the booklet during the in-person workshop in Ranomafana, and the rest of the trip in the country.

From "giving back" to engagement

My own understanding on what "giving back" means has been transformed over the years. At the beginning of the doctoral research I thought about "giving back" as a defined moment or practice, something that should be done at the end of my research, close to the idea of the research brief I created. But, over time, I understood that giving back may also mean to maintain a relationship throughout the entire research process (Kovach, 2021). And this is reflected in my engagement with EE practitioners.

My relationship with EE practitioners started in the most traditional format: I was the researcher, they were the participants. One of the common themes that appeared during the first interviews was the lack of collaborations amongst EE organisations, despite working with similar topics and challenges. Travelling across Madagascar is expensive, and most organizations cannot afford it. There was clearly a need, and it was clearly an opportunity to use my power strategically, but I was unsure whether I could – or should - address it.

My initial idea of having a workshop with EE practitioners was transformed and enriched over zoom discussions with the team of co-organizers during covid times. As a result of our enthusiasm, we organized a series of online meetings, and a two-day in-person workshop in Ranomafana (more details in My Journey). Organizing those exchanges was tedious, and it was all dependent on the good will and free time of the team of organizers. But, it was also an incredible learning process for me, that allowed me to be connected with the realities of the practitioners, despite being thousands of kilometres apart. And, most important of all, I could give back to them part of the time they had given to me.

Limitations, Merits and Future Research

In this section, I would like to discuss the broader limitations of this thesis and provide some recommendations for future research. The limitations of each individual chapter are detailed in the corresponding chapters.

Madagascar is introduced in the thesis as an example of a Global South country. Yet, Madagascar presents quite a unique context as it has long received lots of international attention and pressure (Waeber et al., 2019). Its environmental program has often been held up as showcase to other countries on how to coordinate donors and government (Corson, 2017), and how responsible environmental governance can address interlinked social and environmental problems (Duffy, 2006). Thus, due to the uniqueness of the Malagasy context, it may only be possible to extrapolate (if at all) some of the results of this thesis to other biodiversity hotspots, such as the Papua New Guinea (Benson, 2012; Melick et al., 2012), although it was far beyond the scope of this thesis to investigate which countries present similar conservation and EE contexts as Madagascar. Additionally, the generalisability of the results in Chapter III are certainly limited by the methodological approach, and the relatively small number of interviewees. Thus, even though Finland and Madagascar are presented as an example of a Global North and Global South countries, the results are certainly constrained by the particularities of each context. Finally, I would like to acknowledge that the aim of this thesis was never to present generalizable results based on statistical confidence, but instead, to provide an understanding of the topic by weaving together different strands of data. For this reason, and as it is often the case in qualitative research, it may not be possible to demonstrate that the entire findings are applicable to other situations (Drury et al., 2011) (refer to Methodology section). Nevertheless, some of the theoretical and methodological contributions and reflections of this thesis (see Conclusions) are potentially applicable elsewhere.

In this research, I mostly interacted with EE practitioners with a leading role in their organizations. Whereas this was initially a conscious choice (CII and CIII), it became a forced decision later on. These practitioners were often the ones with Internet access that could participate in the online workshops and the online questionnaire (CIV). Most of these practitioners were highly educated individuals, some of them living in the capital of Antananarivo, who were accustomed to work with international collaborators. While these practitioners may have a very good understanding of the design of the education programs at the more theoretical level, they may have less experience on what happens in practice on the ground. With unlimited time, and without travel restrictions, this could have been compensated by more on-the-ground visits, having the opportunity to speak to other practitioners who may be the ones directly implementing the programs.

This thesis deepens into the relation between conservation practice and culture, establishing a first milestone examining the potential of biocultural approaches to EE (CIV). Yet, with some limitations. First, being a non-Malagasy researcher may not be optimal to examine these aspects (see Positionality section). In addition, the goal of this research was not to describe in detail concrete examples of culturally grounded projects, even though some are mentioned in Chapter IV. Further work could describe examples of culturally grounded education programs beyond Madagascar, that could serve as examples to those practitioners that want to design locally-relevant initiatives. Finally, it was left beyond the scope of the thesis to investigate the role of EE from the perspective of local communities. Similarly, this thesis examined projects that are mostly led by external actors. Future work could examine the role of local knowledge and its learning process towards sustainable and equitable futures.

Along the thesis I have advocated for the need to decolonize EE practices, and to implement place-based learning approaches that start with a clear understanding of local needs and aspirations. Additionally, as reflected in the previous section, I have attempted to decolonize my own research practices. Yet, I acknowledge that most of the literature I use is, inevitably, Western-led and written in English. Despite my attempts to share co-authorship with Malagasy colleagues, and refer to literature led by Malagasy researchers, I acknowledge that I have only incorporated a limited number of literature coming from Indigenous scholars and sub-Saharan African EE scholars (some of which has been introduced by the pre-examiners of this thesis). This literature probably presents much more critical, theoretical and political approaches to EE, and would potentially be relevant in the Malagasy context. Future research on this subject will certainly benefit from diving into and enriching perspectives from this literature.

This thesis contributes to the growing body of qualitative conservation social science literature (Shackleton et al., 2023; Sutherland et al., 2018) and has attempted to do so by following guidelines to improve the quality of this sort of research (Moon et al., 2016) (see Methodology section). However, coming from a background as a natural scientist, the philosophical principles and assumptions of social sciences were not always obvious to me. Consequently, I did not undertake a proper reflection on my ontology, epistemology, and philosophical perspectives before starting this project, as suggested by Moon & Blackman (2014). However, over the course of this thesis, I have understood the need to remain aware of personal assumptions embedded in own research (Moon et al., 2019). And, despite this has not been explicitly mentioned in the Methodology section, I have reflected about it through discussions with peers and colleagues, and will continue to learn during my academic career.

This thesis attempts to narrow down the significant gap between science and practice (Knight et al., 2006; Winter et al., 2020). It does so with an initial exploratory trip that identified relevant research gaps and questions (CI), and the adoption of participatory methods such as the theory of change (CII) that allowed the emergence of unexpected insights (Newing et al., 2011). To the best of our knowledge, this research was the first to implement theory of change as a research tool in the context of EE, inspired by the work of Krasny (2020). Yet, further research could benefit from moving one step further towards transdisciplinary approaches that would start by designing the research agenda together with EE practitioners. Similarly, Brittain et al. (2020) suggest that researchers incorporate time and funding in their proposals to allow participants to fully participate in research projects. Yet, I would like to acknowledge that, in many occasions, this may be beyond the possibilities of doctoral researchers. Thus, adopting decolonizing research practices will certainly require further institutional support (Brittain et al., 2020) and to reconsider what is valued as impact in conservation research (Lavery et al., 2021).

CONCLUSIONS AND WAY FORWARD

This thesis provides an in-depth examination of the role of education as a conservation strategy to enhance human-environment relationships in the Global South. Additionally, it examines the potential of EE to establish locally relevant and equitable forms of conservation to tackle the ongoing biodiversity crisis.

This thesis adds valuable theoretical perspectives to the field of EE and the growing body of qualitative conservation social science literature. This research establishes a dialogue between theoretical concepts and empirical data from EE practitioners on the ways education influence conservation (CII). Additionally, this study provides evidence on the need to contextualize interventions (CIII), and develops a conceptual framework on biocultural approaches to EE (CIV).

In terms of methodological contributions, this thesis is potentially one of the first studies to present the perspectives of EE practitioners in a Global South context, using participatory research methods (CII & CIII). Additionally, this research establishes a first milestone by providing concrete examples of emancipatory and culturally grounded EE initiatives across Madagascar. Furthermore, this thesis presents a series of reflections and practical examples on how to carefully consider ethical issues throughout the whole research process.

This research provides deeper insights into the role of education from the perspective of EE practitioners, and adds to the criticism of the knowledge-attitudes-behaviour linear paradigm (Heimlich, 2010; Krasny, 2020; West, 2015). These findings suggest that, beyond knowledge and attitudes, there are a range of complementing pathways that influence conservation, and that those partially reflect theoretical advances (CII). Additionally, this thesis emphasizes the importance of reflecting on these pathways as a first step to guarantee meaningful design and evaluation of the education initiatives.

This thesis provides a comprehensive examination of the characteristics of non-formal EE and the role of NGOs across Madagascar, complementing previous research on EE in the Global South (Breuer & Mavinga, 2010; Freund et al., 2019; Jiménez et al., 2017; Kuhar et al., 2012; Niens, 2022; Reibelt, 2017). The findings indicate that the status quo of Madagascar reflects global patterns in terms of lack of exhaustive evaluation and a limited inclusive approach (CI). Additionally, these findings illustrate that EE initiatives are strongly influenced by the national curriculum, funders requirements and expectations, and Western epistemologies (CIII), adding to previous research that challenge the idea of universal EE solutions (De Andrade & Sorrentino, 2014; Reid et al., 2021).

This study is one of the first attempts to examine EE initiatives from biocultural lenses. These findings indicate that EE has the potential to build on place-based cultural

perspectives, and to enhance both biological and cultural biodiversity. Yet, this research also recognises that there is still a long way ahead to establish initiatives that are truly culturally grounded (CIV).

Overall, this thesis offers valuable insights to rethink the role of EE in the Global South. EE will potentially remain a foundational aspect of many conservation initiatives to tackle the biodiversity crisis. If so, I claim that EE must support inclusive and transformative conservation approaches, instead of reinforcing exclusionary conservation models (Kashwan et al., 2021). For this reason, I advocate that future education projects should adopt genuine emancipatory and rights-based approaches, encourage meaningful participation of community members, and respect and incorporate diverse knowledge systems.

Finally, I hope that this thesis contributes to advance the understanding of the critical role that EE plays in the conservation of Madagascar's unique biodiversity, and to improve the design of future education programs. For this reason, I suggest the following practical recommendation[1], particularly target at EE practitioners:

i. **Beyond knowledge and attitudes.** Design transformative education programs that recognise the complexity of factors that influence human behaviour beyond knowledge and attitudes, such as efficacy, sense of place and social capital. Echo theoretical advances on this field, whenever research results are available and accessible.

ii. **Thoughtful evaluations.** Reflect first on how an education program works to design thoughtful evaluation. In other words, identify the pathways of change on how the education initiative will make a difference. After, choose suitable indicators that mirror long-term individual and societal changes, as well as conservation success.

iii. **Contextualized learning.** Adopt biocultural approaches to EE to recognize, support, and celebrate the cultural diversity of Madagascar and its myriad knowledge systems. This can be done by adopting place-based learning approaches, tailoring programs to local realities, recognize and built on existing relationships with the land (biocultural relations) and design education projects collaboratively with local communities.

[1] The described practical recommendations have been extended from the ones provided in the Research Brief (Brias-Guinart, 2022a)

iv. **Emancipatory approach.** Expand the narrow ecological focus of EE and move beyond behaviour change. Instead, recognize EE as an emancipatory tool to address complex social issues. Empower local communities to become environmental agents, enhance their advocacy skills, support local communities' rights, and encourage inclusive and equitable management of natural resources.

v. **Governmental commitment.** Acknowledge the limited resources and scope of non-governmental actors. Urge the government to better integrate EE in practice across the national curriculum. Advocate for EE as a pathway to support inclusive and legitimate biodiversity conservation whilst improving the well-being of local communities.

REFERENCES

Adams, W. M., & Hutton, J. (2007). People, Parks and Poverty: Political Ecology and Biodiversity Conservation. *Conservation and Society*, *5*(2), 147–183.

Adelaar, A., & Himmelmann, N. (Eds.). (2005). *The Austronesian Languages of Asia and Madagascar* (1st ed.). Routledge.

Adenle, A. A., Stevens, C., & Bridgewater, P. (2015). Global conservation and management of biodiversity in developing countries: An opportunity for a new approach. *Environmental Science & Policy*, *45*, 104–108. https://doi.org/10.1016/j.envsci.2014.10.002

Ajzen, I. (1991). The Theory of Planned Behavior. *Organizational Behavior and Human Decision Processes*, *50*(2), 179–211.

Aldashev, G., & Vallino, E. (2019). The dilemma of NGOs and participatory conservation. *World Development*, *123*, 104615. https://doi.org/10.1016/j.worlddev.2019.104615

Allgood, B., Hofberg, M., Musikanski, L., Michelini, L., & Moser, M. (2019). Assessing Community-Based Wildlife Conservation Programs with the Gross National Happiness Framework. *International Journal of Community Well-Being*, *2*(3), 301–337. https://doi.org/10.1007/s42413-019-00045-7

Allibert, C. (2008). Austronesian Migration and the Establishment of the Malagasy Civilization: Contrasted Readings in Linguistics, Archaeology, Genetics and Cultural Anthropology. *Diogenes*, *218*(2), 7–16. https://doi.org/10.1177/0392192108090734

Amin, V. L., & Yok, M. C. K. (2015). Thematic Interpretation Approach in Environmental Adult Education. *Procedia - Social and Behavioral Sciences*, *167*, 261–266. https://doi.org/10.1016/j.sbspro.2014.12.672

Andresen, E., López-del-Toro, P., Franquesa-Soler, M., Mora, F., & Barraza, L. (2020). Teenagers' Awareness about Local Vertebrates and Their Functions: Strengthening Community Environmental Education in a Mexican Shade-Coffee Region to Foster Animal Conservation. *Sustainability*, *12*(20), Article 20. https://doi.org/10.3390/su12208684

Ardoin, N. M., Bowers, A. W., & Gaillard, E. (2020). Environmental education outcomes for conservation: A systematic review. *Biological Conservation*, *241*(108224). https://doi.org/10.1016/j.biocon.2019.108224

Ardoin, N. M., & Heimlich, J. E. (2013). Views From the Field: Conservation Educators' and Practitioners' Perceptions of Education as a Strategy for Achieving Conservation Outcomes. *The Journal of Environmental Education*, *44*(2), 97–115. https://doi.org/10.1080/00958964.2012.700963

Astuti, R. (1995). "The Vezo are not a kind of people". Identity, difference and "ethnicity" among a fishing people of western Madagascar. *American Ethnologist*, *22*(3), 464–482.

Balestri, M., Campera, M., Anne-Isola, K., & Donati, G. (2017). Assessment of long-term retention of environmental education lessons given to teachers in rural areas of Madagascar. *Applied Environmental Education & Communication*, *16*(4), 298–311. https://doi.org/10.1080/1533015X.2017.1348275

Bandura, A. (1977). Self-Efficacy: Toward a Unifying Theory of Behavioral Change. *Psychological Review*, *84*(2), 117–148.

Bannister, K. (2018). From Ethical Codes to Ethics as Praxis: An Invitation. *Ethnobiology Letters*, *9*(1), Article 1. https://doi.org/10.14237/ebl.9.1.2018.1060

Barnes, M. D., Craigie, I. D., Dudley, N., & Hockings, M. (2017). Understanding local-scale drivers of biodiversity outcomes in terrestrial protected areas. *Annals of the New York Academy of Sciences*, *1399*(1), 42–60. https://doi.org/10.1111/nyas.13154

Barrett, G., Brooks, S., Josefsson, J., & Zulu, N. (2013). Starting the conversation: Land issues and critical conservation studies in post-colonial Africa. *Journal of Contemporary African Studies*, *31*(3), 336–344. https://doi.org/10.1080/02589001.2013.802440

Bassey, M. (1981). Pedagogic research: On the relative merits of search for generalisation and study of single events. *Oxford Review of Education*, *7*, 73–93.

Bataille, C. Y., Malinen, S. K., Yletyinen, J., Scott, N., & Lyver, P. O. (2021). Relational values provide common ground and expose multi-level constraints to cross-cultural wetland management. *People and Nature*, *3*(4), 941–960. https://doi.org/10.1002/pan3.10244

Belcher, B., & Claus, R. (2020). Theory of Change. Td-net toolbox profile. *Swiss Academies of Arts and Sciences: Td-Net Toolbox for Co-Producing Knowledge*, *5*. https://doi.org/doi.org/10.5281/zenodo.3717451

Bennett, N. J., Roth, R., Klain, S. C., Chan, K. M. A., Clark, D. A., Cullman, G., Epstein, G., Nelson, M. P., Stedman, R., Teel, T. L., Thomas, R. E. W., Wyborn, C., Curran, D., Greenberg, A., Sandlos, J., & Veríssimo, D. (2017). Mainstreaming the social sciences in conservation. *Conservation Biology*, *31*(1), 56–66. https://doi.org/10.1111/cobi.12788

Benson, C. (2012). Conservation NGOs in Madang, Papua New Guinea: Understanding community and donor expectations. *Society & Natural Resources*, *25*(1), 71–86.

Bhan, G. (2014). Moving from 'Giving Back' to Engagement. *Journal of Research Practice*, *10*(2), Article 2. http://jrp.icaap.org/index.php/jrp/article/view/406

Bizerril, M. X. A., Soares, C. C., & Santos, J. P. (2011). Linking community communication to conservation of the maned wolf in central Brazil. *Environmental Education Research*, *17*(6), 815–827. https://doi.org/10.1080/13504622.2011.620701

Bloom, B., Englehart, M., Furst, E., Hill, W., & Krathwohl, D. (1956). *Taxonomy of Educational Objectives: The Classification of Educational Goals*. Longmans Green.

Bodonirina, N., Reibelt, L. M., Stoudmann, N., Chamagne, J., Jones, T. G., Ravaka, A., Ranjaharivelo, H. V. F., Ravonimanantsoa, T., Moser, G., De Grave, A., Garcia, C., Ramamonjisoa, B. S., Wilmé, L., & Waeber, P. O. (2018). Approaching Local Perceptions of Forest Governance and Livelihood Challenges with Companion Modeling from a Case Study around Zahamena National Park, Madagascar. *Forests*, *9*(10), Article 10. https://doi.org/10.3390/f9100624

Bowra, A., Mashford-Pringle, A., & Poland, B. (2020). Indigenous learning on Turtle Island: A review of the literature on land-based learning. *The Canadian Geographer / Le Géographe Canadien*, 1–9. https://doi.org/10.1111/cag.12659

Breuer, T., & Mavinga, F. B. (2010). Education for the conservation of great apes and other wildlife in northern Congo—The importance of nature clubs. *American Journal of Primatology*, *72*(5), 454–461. https://doi.org/10.1002/ajp.20774

Breuer, T., Mavinga, F. B., Evans, R., & Lukas, K. E. (2017). Using video and theater to increase knowledge and change attitudes-Why are gorillas important to the world and to Congo? *American Journal of Primatology*, *79*(10). https://doi.org/10.1002/ajp.22692

Brias-Guinart, A. (2022a). *Harnessing the potential of environmental education to improve conservation practice in Madagascar* [Research Brief for practitioners]. University of Helsinki. https://researchportal.helsinki.fi/en/publications/harnessing-the-potential-of-environmental-education-to-improve-co

Brias-Guinart, A. (2022b). Misy miala! A road map to malagasy public transport. *Current Conservation*. https://www.currentconservation.org/misy-miala-a-road-map-to-malagasy-public-transport-2/

Bridgewater, P., & Rotherham, I. D. (2019). A critical perspective on the concept of biocultural diversity and its emerging role in nature and heritage conservation. *People and Nature*, *1*(3), 291–304. https://doi.org/10.1002/pan3.10040

Brittain, S., Ibbett, H., de Lange, E., Dorward, L., Hoyte, S., Marino, A., Milner-Gulland, E. J., Newth, J., Rakotonarivo, S., Veríssimo, D., & Lewis, J. (2020). Ethical considerations when conservation research involves people. *Conservation Biology*, *34*(4), 925–933. https://doi.org/10.1111/cobi.13464

Brockington, D. (2004). Community Conservation, Inequality and Injustice: Myths of Power in Protected Area Management. *Conservation and Society*, *2*(2), 411–432.

Brockington, D., & Igoe, J. (2006). Eviction for Conservation: A Global Overview. *Conservation and Society*, *4*(3), 424.

Broussard, S. R., Jones, S. B., Nielsen, L. A., & Flanagan, C. A. (2001). Forest Stewardship Education: Fostering Positive Attitudes in Urban Youth. *Journal of Forestry*, *99*(1), 37–42. https://doi.org/10.1093/jof/99.1.37

Brown, E. R., Imron, M. A., Campera, M., & Nekaris, K. a. I. (2020). Testing efficacy of a multi-site environmental education programme in a demographically and biologically diverse setting. *Environmental Conservation*, *47*(1), 60–66. https://doi.org/10.1017/S0376892919000389

Burgess, J., Harrison, C., & Filius, P. (1998). Environmental communication and the cultural politics of environmental citizenship, Environment and Planning A, 30, pp. 1445–1460. *Environment and Planning A: Economy and Space*, *30*(8), 1445–1460.

Burke, L., Díaz-Reviriego, I., Lam, D. P. M., & Hanspach, J. (2023). Indigenous and local knowledge in biocultural approaches to sustainability: A review of the literature in Spanish. *Ecosystems and People*, *19*(1), 2157490. https://doi.org/10.1080/26395916.2022.2157490

Burnett, E., Sills, E., Peterson, M. N., & DePerno, C. (2016). Impacts of the conservation education program in Serra Malagueta Natural Park, Cape Verde. *Environmental Education Research*, *22*(4), 538–550. https://doi.org/10.1080/13504622.2015.1015497

Cabeza, M., Terraube, J., Burgas, D., Temba, E. M., & Rakoarijaoana, M. (2019). Gold is not green: Artisanal gold mining threatens Ranomafana National Park's biodiversity. *Animal Conservation*, *22*(5), 417–419. https://doi.org/10.1111/acv.12475

Cameron, W. B. (1963). Informal Sociology: A Casual Introduction to Sociological Thinking (Vol. 21). Random House.

Cantell, H., Tolppanen, S., Aarnio-Linnanvuori, E., & Lehtonen, A. (2019). Bicycle model on climate change education: Presenting and evaluating a model. *Environmental Education Research*, *25*(5), 717–731. https://doi.org/10.1080/13504622.2019.1570487

Carleton-Hug, A., & Hug, J. W. (2010). Challenges and opportunities for evaluating environmental education programs. *Evaluation and Program Planning*, *33*(2), 159–164. https://doi.org/10.1016/j.evalprogplan.2009.07.005

Carrasco, L. R., Chan, J., McGrath, F., & Nghiem, L. (2017). Biodiversity conservation in a telecoupled world. *Ecology and Society*, *22*(3). https://doi.org/10.5751/ES-09448-220324

Carrière, S., Sabinot, C., & Pagezy, H. (2017). Children's ecological knowledge: Drawings as a tool for ethnoecologists (Gabon, Madagascar). *AnthropoChildren*, *7*. https://doi.org/10.25518/2034-8517.2777

Carter, R. L., & Simmons, B. (2010). The History and Philosophy of Environmental Education. In A. M. Bodzin, B. Shiner Klein, & S. Weaver (Eds.), *The Inclusion of Environmental Education in Science Teacher Education* (pp. 3–16). Springer Netherlands. https://doi.org/10.1007/978-90-481-9222-9_1

CBD. (1992). *United Nations Convention on Biological Diversity*. https://www.cbd.int/convention/text/

CBD. (2022). *Kunming-Montreal Global Biodiversity Framework*. https://www.cbd.int/doc/decisions/cop-15/cop-15-dec-04-en.pdf

Chandra, W. (2022). Field school teaches young Indigenous Indonesians how to care for their forests (A. Mathai, Trans.). *Mongabay Series*. https://news.mongabay.com/2022/02/field-school-teaches-young-indigenous-indonesians-how-to-care-for-their-forests/

Chape, S., Spalding, M., & Jenkins, M. D. (Eds.). (2008). *The World's Protected Areas: Status, Values and Prospects in the 21st Century*. University of California Press. https://wedocs.unep.org/xmlui/handle/20.500.11822/33101

Clark, C. R., Heimlich, J. E., Ardoin, N. M., & Braus, J. (2020). Using a Delphi study to clarify the landscape and core outcomes in environmental education. *Environmental Education Research*, *26*(3), 381–399. https://doi.org/10.1080/13504622.2020.1727859

Corson, C. (2017). A history of conservation politics in Madagascar. *Madagascar Conservation & Development*, *12*(1), Article 1.

Cortés-Capano, G., Hausmann, A., Di Minin, E., & Kortetmäki, T. (2022). Ethics in biodiversity conservation: The meaning and importance of pluralism. *Biological Conservation*, *275*, 109759. https://doi.org/10.1016/j.biocon.2022.109759

Creswell, J. W. (2009). Research design: Qualitative, quantitative, and mixed methods approaches. SAGE.

Dahl, Ø. (2011). Linguistic policy challenges in Madagascar. In C. Thornell & K. Legère (Eds.), *North-South Contributions to African Languages* (pp. 51–79). Rüdiger Köppe.

Dawson, N., Coolsaet, B., Sterling, E., Loveridge, R., Gross-Camp, N., Wongbusarakum, S., Sangha, K., Scherl, L., Phan, H., Zafra-Calvo, N., Lavey, W., Byakagaba, P., Idrobo, C. J., Chenet, A., Bennett, N., Mansourian, S., & Rosado-May, F. (2021). The role of Indigenous peoples and local communities in effective and equitable conservation. *Ecology and Society*, *26*(3). https://doi.org/10.5751/ES-12625-260319

De Andrade, D. F., & Sorrentino, M. (2014). Dialogue as a Basis for the Design of Environmental Pedagogies. *Journal of Education for Sustainable Development*, *8*(2), 143–154. https://doi.org/10.1177/0973408214548373

de Koning, M., Meyer, B., Moors, A., & Pels, P. (2019). Guidelines for anthropological research: Data management, ethics, and integrity. *Ethnography*, *20*(2), 170–174.

Declaration of Belém. (1988). *The Declaration of Belem*. https://www.ethnobiology.net/wp-content/uploads/Decl-Belem-Eng-from-Posey.pdf

Dewar, R. E., & Richard, A. F. (2012). Madagascar: A History of Arrivals, What Happened, and Will Happen Next. *Annual Review of Anthropology*, *41*(1), 495–517. https://doi.org/10.1146/annurev-anthro-092611-145758

Díaz, S., Settele, J., Brondízio, E. S., Ngo, H. T., Agard, J., Arneth, A., Balvanera, P., Brauman, K. A., Butchart, S. H. M., Chan, K. M. A., Garibaldi, L. A., Ichii, K., Liu, J., Subramanian, S. M., Midgley, G. F., Miloslavich, P., Molnár, Z., Obura, D., Pfaff, A., … Zayas, C. N. (2019). Pervasive human-driven decline of life on Earth points to the need for transformative change. *Science*, *366*(6471). https://doi.org/10.1126/science.aax3100

Díaz, S., Zafra-Calvo, N., Purvis, A., Verburg, P., H., Obura, D., Leadley, P., Chaplin-Kramer, R., De Meester, L., Dulloo, E., Martín-López, B., Shaw, M. R., Visconti, P., Broadgate, W., Bruford, M. W., Burgess, N. D., Cavender-Bares, J., DeClerck, F., Fernández-Palacios, Jj. M., Garibaldi, L. A., … Zanne, A. E. (2020). *Set ambitious goals for biodiversity and sustainability*. *370*(6515), 411–413. https://doi.org/10.1126/science.abe1530

Dickman, A., Johnson, P. J., van Kesteren, F., & Macdonald, D. W. (2015). The moral basis for conservation: How is it affected by culture? *Frontiers in Ecology and the Environment*, *13*(6), 325–331. https://doi.org/10.1890/140056

Dieser, O., & Bogner, F. X. (2016). Young people's cognitive achievement as fostered by hands-on-centred environmental education. *Environmental Education Research*, *22*(7), 943–957. https://doi.org/10.1080/13504622.2015.1054265

Dietsch, A. M., Baruch-Mordo, S., Breck, S. W., & Ciarniello, L. M. (2017). Education is not a panacea for reducing human–black bear conflicts. *Ecological Modelling*.

Dietz, L. A., & Nagagata, E. Y. (1995). Golden lion tamarin conservation program: A community educational effort for forest conservation in Rio de Janeiro State, Brazil. *Conserving Wildlife: International Education and Communication Approaches*, 64–86.

Dolins, F. L., Jolly, A., Rasamimanana, H., Ratsimbazafy, J., Feistner, A. T. C., & Ravoavy, F. (2010). Conservation education in Madagascar: Three case studies in the biologically diverse island-continent. *American Journal of Primatology*, *72*(5), 391–406. https://doi.org/10.1002/ajp.20779

Domínguez, L., & Luoma, C. (2020). Decolonising Conservation Policy: How Colonial Land and Conservation Ideologies Persist and Perpetuate Indigenous Injustices at the Expense of the Environment. *Land*, *9*(3), Article 3. https://doi.org/10.3390/land9030065

Douglass, K., Hixon, S., Wright, H. T., Godfrey, L. R., Crowley, B. E., Manjakahery, B., Rasolondrainy, T., Crossland, Z., & Radimilahy, C. (2019). A critical review of radiocarbon dates clarifies the human settlement of Madagascar. *Quaternary Science Reviews*, *221*, 105878. https://doi.org/10.1016/j.quascirev.2019.105878

Dressler, W., Büscher, B., Schoon, M., Brockington, D., Hayes, T., Kull, C. A., Mccarthy, J., & Shrestha, K. (2010). From hope to crisis and back again? A critical history of the global CBNRM narrative. *Environmental Conservation*, *37*(1), 5–15. https://doi.org/10.1017/S0376892910000044

Dröge, S., Poudyal, M., Hockley, N., Mandimbiniaina, R., Rasoamanana, A., Andrianantenaina, N. S., & Llopis, J. C. (2022). Constraints on Rice Cultivation in Eastern Madagascar: Which Factors Matter to Smallholders, and Which Influence Food Security? *Human Ecology*, *50*(3), 493–513. https://doi.org/10.1007/s10745-022-00336-2

Druker-Ibáñez, S., & Cáceres-Jensen, L. (2022). Integration of indigenous and local knowledge into sustainability education: A systematic literature review. *Environmental Education Research*, *28*(8), 1209–1236. https://doi.org/10.1080/13504622.2022.2083081

Drury, R., Homewood, K., & Randall, S. (2011). Less is more: The potential of qualitative approaches in conservation research. *Animal Conservation*, *14*(1), 18–24. https://doi.org/10.1111/j.1469-1795.2010.00375.x

Duffy, R. (2006). Non-governmental organisations and governance states: The impact of transnational environmental management networks in Madagascar. *Environmental Politics*, *15*(5), 731–749. https://doi.org/10.1080/09644010600937173

Eklund, J., Cheek, J. Z., Andriamaro, L., Bakoliarimisa, T. M., Galitsky, C., Rabearivololona, O., Rakotobe, D. J., Ralison, H. O., Randriamiharisoa, L. O., Rasamoelinarivo, J., Rasolofoson, D., Ratsirarson, J., Razafimpahanana, A., Temba, E. M., Pyhälä, A., & Miller, D. C. (2022). Insights from practitioners in Madagascar to inform more effective international conservation funding. *Madagascar Conservation & Development*, *17*(1), Article 1.

Eklund, J., Jones, J. P. G., Räsänen, M., Geldmann, J., Jokinen, A.-P., Pellegrini, A., Rakotobe, D., Rakotonarivo, O. S., Toivonen, T., & Balmford, A. (2022). Elevated fires during COVID-19 lockdown and the vulnerability of protected areas. *Nature Sustainability*, *5*(7), Article 7. https://doi.org/10.1038/s41893-022-00884-x

Environmental Education working group Madagascar. (2021). *Lemur News*, *23*.

Esson, M., & Moss, A. (2016). The challenges of evaluating conservation education across cultures. *International Zoo Yearbook*, *50*(1), 61–67. https://doi.org/10.1111/izy.12113

Estrada, A., Garber, P. A., Gouveia, S., Fernández-Llamazares, Á., Ascensão, F., Fuentes, A., Garnett, S. T., Shaffer, C., Bicca-Marques, J., Fa, J. E., Hockings, K., Shanee, S., Johnson, S., Shepard, G. H., Shanee, N., Golden, C. D., Cárdenas-Navarrete, A., Levey, D. R., Boonratana, R., … Volampeno, S. (2022). Global importance of Indigenous Peoples, their lands, and knowledge systems for saving the world's primates from extinction. *Science Advances*, *8*(32), eabn2927. https://doi.org/10.1126/sciadv.abn2927

Etienne, M., Du Toit, D. R., & Pollard, S. (2011). ARDI: A Co-construction Method for Participatory Modeling in Natural Resources Management. *Ecology and Society*, *16*(1). https://www.jstor.org/stable/26268857

Fedele, G., Donatti, C. I., Bornacelly, I., & Hole, D. G. (2021). Nature-dependent people: Mapping human direct use of nature for basic needs across the tropics. *Global Environmental Change*, *71*, 102368. https://doi.org/10.1016/j.gloenvcha.2021.102368

Fernández-Llamazares, Á., Lepofsky, D., Lertzman, K., Armstrong, C. G., Brondizio, E. S., Gavin, M. C., Lyver, P. O., Nicholas, G. P., Pascua, P., Reo, N. J., Reyes-García, V., Turner, N. J., Yletyinen, J., Anderson, E. N., Balée, W., Cariño, J., David-Chavez, D. M., Dunn, C. P., Garnett, S. C., … Vaughan, M. B. (2021). Scientists' Warning to Humanity on Threats to Indigenous and Local Knowledge Systems. *Journal of Ethnobiology*, *41*(2), 144–169. https://doi.org/10.2993/0278-0771-41.2.144

Fernández-Llamazares, Á., López-Baucells, A., Rocha, R., Andriamitandrina, S. F. M., Andriatafika, Z. E., Burgas, D., Temba, E. M., Torrent, L., & Cabeza, M. (2018). Are sacred caves still safe havens for the endemic bats of Madagascar? *Oryx*, *52*(2), 271–275. https://doi.org/10.1017/S0030605317001648

Ferreira, S. (2012). Moulding urban children towards environmental stewardship: The Table Mountain National Park experience. *Environmental Education Research*, *18*(2), 251–270. https://doi.org/10.1080/13504622.2011.622838

Finney, C. (2014). Doing it Old School: Reflections on Giving Back. *Journal of Research Practice*, *10*(2).

Fitzimons, J. (2012). In D. Lindenmayer & P. Gibbons (Eds.), *Biodiversity monitoring in Australia* (pp. 91–99). CSIRO Publishing.

Florio-Raune. (1991). Conversation and narrative in collaborative research. In C. Witherell & N. Noddings (Eds.), *Stories lives tell: Narrative and dialogue in education* (pp. 234–256). Teachers College Press.

Folke, C., Polasky, S., Rockström, J., Galaz, V., Westley, F., Lamont, M., Scheffer, M., Österblom, H., Carpenter, S. R., Chapin, F. S., Seto, K. C., Weber, E. U., Crona, B. I., Daily, G. C., Dasgupta, P., Gaffney, O., Gordon, L. J., Hoff, H., Levin, S. A., … Walker, B. H. (2021). Our future in the Anthropocene biosphere. *Ambio*, *50*(4), 834–869. https://doi.org/10.1007/s13280-021-01544-8

Frantz, C. M., & Mayer, F. S. (2014). The importance of connection to nature in assessing environmental education programs. *Studies in Educational Evaluation*, *41*, 85–89. https://doi.org/10.1016/j.stueduc.2013.10.001

Fraser, J., Gupta, R., & Krasny, M. E. (2015). Practitioners' perspectives on the purpose of environmental education. *Environmental Education Research*, *21*(5), 777–800. https://doi.org/10.1080/13504622.2014.933777

Freund, C. A., Achmad, M., Kanisius, P., Naruri, R., Tang, E., & Knott, C. D. (2019). Conserving orangutans one classroom at a time: Evaluating the effectiveness of a wildlife education program for school-aged children in Indonesia. *Animal Conservation*, *23*(1), 18–27. https://doi.org/10.1111/acv.12513

Fritz-Vietta, N. V. M. (2016). What can forest values tell us about human well-being? Insights from two biosphere reserves in Madagascar. *Landscape and Urban Planning*, *147*, 28–37. https://doi.org/10.1016/j.landurbplan.2015.11.006

Fritz-Vietta, N. V. M., Ferguson, B. H., Stoll-Kleemann, S., & Ganzhorn, J. U. (2011). Conservation in a Biodiversity Hotspot: Insights from Cultural and Community Perspectives in Madagascar. In F. E. Zachos & J. C. Habel (Eds.), *Biodiversity Hotspots. Distribution and Protection of Conservation Priority Areas*. Springer.

Fritz-Vietta, N. V. M., Tahirindraza, H. S., & Stoll-Kleemann, S. (2017). Local people's knowledge with regard to land use activities in southwest Madagascar—Conceptual insights for sustainable land management. *Journal of Environmental Management*, *199*, 126–138. https://doi.org/10.1016/j.jenvman.2017.05.034

Galafassi, D., Daw, T. M., Thyresson, M., Rosendo, S., Chaigneau, T., Bandeira, S., Munyi, L., Gabrielsson, I., & Brown, K. (2018). Stories in social-ecological knowledge cocreation. *Ecology and Society*, *23*(1). https://www.jstor.org/stable/26799047

Gardner, C. J., Nicoll, M. E., Birkinshaw, C., Harris, A., Lewis, R. E., Rakotomalala, D., & Ratsifandrihamanana, A. N. (2018). The rapid expansion of Madagascar's protected area system. *Biological Conservation*, *220*, 29–36. https://doi.org/10.1016/j.biocon.2018.02.011

Gardner, C. J., Nicoll, M. E., Mbohoahy, T., Oleson, K. L. L., Ratsifandrihamanana, A. N., Ratsirarson, J., René de Roland, L.-A., Virah-Sawmy, M., Zafindrasilivonona, B., & Davies, Z. G. (2013). Protected areas for conservation and poverty alleviation: Experiences from Madagascar. *Journal of Applied Ecology*, *50*(6), 1289–1294. https://doi.org/10.1111/1365-2664.12164

Garnett, S. T., Burgess, N. D., Fa, J. E., Fernández-Llamazares, Á., Molnár, Z., Robinson, C. J., Watson, J. E. M., Zander, K. K., Austin, B., Brondizio, E. S., Collier, N. F., Duncan, T., Ellis, E., Geyle, H., Jackson, M. V., Jonas, H., Malmer, P., McGowan, B., Sivongxay, A., & Leiper, I. (2018). A spatial overview of the global importance of Indigenous lands for conservation. *Nature Sustainability*, *1*(7), Article 7. https://doi.org/10.1038/s41893-018-0100-6

Gavin, M. C., McCarter, J., Mead, A., Berkes, F., Stepp, J. R., Peterson, D., & Tang, R. (2015). Defining biocultural approaches to conservation. *Trends in Ecology & Evolution*, *30*(3), 140–145. https://doi.org/10.1016/j.tree.2014.12.005

Glick, P., Rajemison, H., Ravelo, A., Raveloarison, Y., Razakamanantsoa, M., & Sahn, D. E. (2005). *The Progression through School and Academic Performance in Madagascar Study: Preliminary Descriptive Results* (Strategies and Analysis for Growth and Access). http://www.cfnpp.cornell.edu/images/wp166.pdf

Global Food Security Index. (2019). The Economist Intelligence Unit. https://cdn.teyit.org/wp-content/uploads/2020/02/Global-Food-Security-Index-2019-report-1.pdf

Golden, C., & Comaroff, J. (2015a). Effects of social change on wildlife consumption taboos in northeastern Madagascar. *Ecology and Society*, *20*(2). https://doi.org/10.5751/ES-07589-200241

Golden, C., & Comaroff, J. (2015b). The human health and conservation relevance of food taboos in northeastern Madagascar. *Ecology and Society*, *20*(2). https://doi.org/10.5751/ES-07590-200242

Goodman, S. M. (Ed.). (2022). *The New Natural History of Madagascar*. Princeton University Press.

Gough, A. (2013). The Emergence of Environmental Education Research. In R. B. Stevenson, M. Brody, J. Dillon, & A. E. J. Wals (Eds.), *International Handbook of Research on Environmental Education* (pp. 13–22). Routledge.

Guba, E. G. (1981). Criteria for assessing the trustworthiness of naturalistic inquiries. *Educational Communication and Technology Journal*, *29*(2), 75–91.

Gubert, F., & Robilliard, A. S. (2008). Risk and schooling decisions in rural Madagascar: A panel data-analysis. *Journal of African Economies*, *17*(2), 207–238.

Gupta, C., & Kelly, A. B. (2014). The Social Relations of Fieldwork: Giving Back in a Research Setting. *Journal of Research Practice*, *10*(2).

Hanspach, J., Jamila Haider, L., Oteros-Rozas, E., Stahl Olafsson, A., Gulsrud, N. M., Raymond, C. M., Torralba, M., Martín-López, B., Bieling, C., García-Martín, M., Albert, C., Beery, T. H., Fagerholm, N., Díaz-Reviriego, I., Drews-Shambroom, A., & Plieninger, T. (2020). Biocultural approaches to sustainability: A systematic review of the scientific literature. *People and Nature*, *2*(3), 643–659. https://doi.org/10.1002/pan3.10120

Hardman, F., Abd-Kadir, J., & Smith, F. (2008). Pedagogical renewal: Improving the quality of classroom interaction in Nigerian primary schools. *International Journal of Educational Development*, *28*(1), 55–69. https://doi.org/10.1016/j.ijedudev.2007.02.008

Harper, J. (2002). Endangered Species. Health, Illness and Death among Madagascar's People of the Forest. Carolina Academic Press.

Heimlich, J. E. (2010). Environmental education evaluation: Reinterpreting education as a strategy for meeting mission. *Evaluation and Program Planning*, *33*(2), 180–185. https://doi.org/10.1016/j.evalprogplan.2009.07.009

Hill, R., Nates-Parra, G., Quezada-Euán, J. J. G., Buchori, D., LeBuhn, G., Maués, M. M., Pert, P. L., Kwapong, P. K., Saeed, S., Breslow, S. J., Carneiro da Cunha, M., Dicks, L. V., Galetto, L., Gikungu, M., Howlett, B. G., Imperatriz-Fonseca, V. L., O'B. Lyver, P., Martín-López, B., Oteros-Rozas, E., … Roué, M. (2019). Biocultural approaches to pollinator conservation. *Nature Sustainability*, *2*(3), Article 3. https://doi.org/10.1038/s41893-019-0244-z

Hohenthal, J., & Minoia, P. (2022). Territorial and mobility justice for Indigenous youth: Accessing education in Ecuadorian Amazonia. *Mobilities*, *17*(6), 850–866. https://doi.org/10.1080/17450101.2021.1987154

Howe, C. (2009). *The Role of Education as a Tool for Environmental Conservation and Sustainable Development* [Doctoral thesis, Imperial College London]. http://hdl.handle.net/10044/1/5377

Howe, P. (2022). Language and Education in Madagascar: Ideological Conflicts and Implementation Challenges. In M. M. Kretzer & R. H. Kaschula (Eds.), *Handbook of Language Policy and Education in Countries of the Southern African Development Community (SADC)* (pp. 156–181). Brill.

Huckle, J. (1988). What we consume: The teachers' handbook. World Wide Fun for Nature. Richmond Publishing Company.

Ihemezie, E. J., Nawrath, M., Strauß, L., Stringer, L. C., & Dallimer, M. (2021). The influence of human values on attitudes and behaviours towards forest conservation. *Journal of Environmental Management*, *292*, 112857. https://doi.org/10.1016/j.jenvman.2021.112857

INSTAT. (2021). *Madagascar en chiffres*. https://www.instat.mg/

International Society of Ethnobiology Code of Ethics (with 2008 additions). (2006). International Society of Ethnobiology. http://ethnobiology.net/code-of-ethics/

IPBES. (2019). *Global Assessment Report on Biodiversity and Ecosystem Services* (p. 56). IPBES secretariat. http://www.ipbes.net/global-assessment

Ivato Declaration. Conservation of Madagascar biodiversity. (2019). Association for Tropical Biology and Conservation. https://tropicalbiology.org/wp-content/uploads/2021/03/Ivato-Declaration-2019-Madagascar.pdf

Jacobson, S. K. (1987). Conservation Education Programmes: Evaluate and Improve Them. *Environmental Conservation*, *14*(3).

Jacobson, S. K. (2010). Effective primate conservation education: Gaps and opportunities. *American Journal of Primatology*, *72*(5), 414–419. https://doi.org/10.1002/ajp.20792

Jacobson, S. K., McDuff, M., & Monroe, and M. (2015). *Conservation Education and Outreach Techniques* (Second Edition, Second Edition). Oxford University Press.

Jenkins, R. K. B., Keane, A., Rakotoarivelo, A. R., Rakotomboavonjy, V., Randrianandrianina, F. H., Razafimanahaka, H. J., Ralaiarimalala, S. R., & Jones, J. P. G. (2011). Analysis of Patterns of Bushmeat Consumption Reveals Extensive Exploitation of Protected Species in Eastern Madagascar. *PLOS ONE*, *6*(12), e27570. https://doi.org/10.1371/journal.pone.0027570

Jenson, K. (2021). *First-Time Participant Experiences of Socioecological Learning Opportunities in an Environmental Education Program for Adults* [Walden University]. Walden Dissertations and Doctoral Studies. 11085. https://scholarworks.waldenu.edu/dissertations/11085/

Jiménez, A., Monroe, M. C., Zamora, N., & Benayas, J. (2017). Trends in environmental education for biodiversity conservation in Costa Rica. *Environment, Development and Sustainability*, *19*(1), 221–238. https://doi.org/10.1007/s10668-015-9734-y

Jones, J. P. G., Andriamarovololona, M. M., & Hockley, N. (2008). The importance of taboos and social norms to conservation in Madagascar. *Conservation Biology*, *22*(4), 976–986. https://doi.org/10.1111/j.1523-1739.2008.00970.x

Jones, J. P. G., Ratsimbazafy, J., Ratsifandrihamanana, A. N., Watson, J. E. M., Andrianandrasana, H. T., Cabeza, M., Cinner, J. E., Goodman, S. M., Hawkins, F., Mittermeier, R. A., Rabearisoa, A. L., Rakotonarivo, O. S., Razafimanahaka, J. H., Razafimpahanana, A. R., Wilmé, L., & Wright, P. C. (2019). Last chance for Madagascar's biodiversity. *Nature Sustainability*, *2*, Article 5. https://doi.org/10.1038/s41893-019-0288-0

Kappeler, P. M., Markolf, M., Rasoloarison, R. M., Fichtel, C., & Durbin, J. (2022). Complex social and political factors threaten the world's smallest primate with extinction. *Conservation Science and Practice*, *4*(9), e12776. https://doi.org/10.1111/csp2.12776

Kashwan, P., V. Duffy, R., Massé, F., Asiyanbi, Adeniyi P., & Marijnen, E. (2021). From Racialized Neocolonial Global Conservation to an Inclusive and Regenerative Conservation. *Environment: Science and Policy for Sustainable Development*, *63*(4), 4–19. https://doi.org/10.1080/00139157.2021.1924574

Kaufmann, J. C. (2014). Contrasting visions of nature and landscapes. In I. R. Scales (Ed.), *Conservation and Environmental Management in Madagascar* (p. 14). Routledge.

Kayira, J. (2015). (Re)creating spaces for uMunthu: Postcolonial theory and environmental education in southern Africa. *Environmental Education Research*, *21*(1), 106–128. https://doi.org/10.1080/13504622.2013.860428

Kiik, L. (2019). Conservationland: Toward the anthropology of professionals in global nature conservation. *Critique of Anthropology*, *39*(4), 91–419. https://doi.org/10.1177/0308275X18821177

Kistler, P., & Spack, S. (2003). Comparing agricultural systems in two areas of Madagascar. In S. M. Goodman & J. P. Benstead (Eds.), *The Natural History of Madagascar* (pp. 123–134). University of Chicago Press.

Klain, S. C., Olmsted, P., Chan, K. M. A., & Satterfield, T. (2017). Relational values resonate broadly and differently than intrinsic or instrumental values, or the New Ecological Paradigm. *PLOS ONE*, *12*(8), e0183962. https://doi.org/10.1371/journal.pone.0183962

Knight, A. T., Cowling, R. M., & Campbell, B. M. (2006). An Operational Model for Implementing Conservation Action. *Conservation Biology*, *20*(2), 408–419.

Kobilinsky, D. (2017). How to deter black bears? Educate people. *The Wildlife Society*. http://wildlife.org/how-to-deter-black-bears-educate-people/

Korteweg, L., & Russell, C. (2012). Editorial: Decolonizing + Indigenizing = Moving Environmental Education Towards Reconciliation. *Canadian Journal of Environmental Education (CJEE)*, *17*, 5–14.

Kovach, M. (2021). Indigenous methodologies: Characteristics, conversations, and contexts (2nd ed.). University of Toronto Press.

Krasny, M. E. (2020). *Advancing environmental education practice*. Cornell University Press.

Kuhar, C. W., Bettinger, T. L., Lehnhardt, K., Cartwright, B., & Cress, D. (2012). Education Program Evaluation at Multiple Primate Sanctuaries in Equatorial Africa. *International Journal of Primatology*, *33*(1), 208–217. https://doi.org/10.1007/s10764-011-9557-0

Kuhar, C. w., Bettinger, T. l., Lehnhardt, K., Tracy, O., & Cox, D. (2010). Evaluating for long-term impact of an environmental education program at the Kalinzu Forest Reserve, Uganda. *American Journal of Primatology*, *72*(5), 407–413. https://doi.org/10.1002/ajp.20726

Landim, A. S., de Menezes Souza, J., dos Santos, L. B., de Freitas Lins-Neto, E. M., da Silva, D. T., & Ferreira, F. S. (2023). Food taboos and animal conservation: A systematic review on how cultural expressions influence interaction with wildlife species. *Journal of Ethnobiology and Ethnomedicine*, *19*(1), 31. https://doi.org/10.1186/s13002-023-00600-9

Larsen, P. B., & Brockington, D. (Eds.). (2018). *The Anthropology of Conservation NGOs: Rethinking the Boundaries*. Palgrave Macmillan. https://doi.org/10.1007/978-3-319-60579-1

Larson, L. R., Stedman, R. C., Cooper, C. B., & Decker, D. J. (2015). Understanding the multi-dimensional structure of pro-environmental behavior. *Journal of Environmental Psychology*, *43*, 112–124. https://doi.org/10.1016/j.jenvp.2015.06.004

Larson, P. M. (2000). History and Memory in the Age of Enslavement: Becoming Merina in Highland Madagascar, 1770-1822. James Currey Ltd.

Lavery, T. H., Morgain, R., Fitzsimons, J. A., Fluin, J., Macgregor, N. A., Robinson, N. M., Scheele, B. C., Selwood, K. E., Spindler, R., Vuong, H., West, S., Wintle, B. A., & Lindenmayer, D. B. (2021). Impact Indicators for Biodiversity Conservation Research: Measuring Influence within and beyond Academia. *BioScience*, *71*(4), 383–395. https://doi.org/10.1093/biosci/biaa159

Leeds, A., Lukas, K. E., Kendall, C. J., Slavin, M. A., Ross, E. A., Robbins, M. M., van Weeghel, D., & Bergl, R. A. (2017). Evaluating the effect of a year-long film focused environmental education program on Ugandan student knowledge of and attitudes toward great apes. *American Journal of Primatology*, *79*(8), e22673. https://doi.org/10.1002/ajp.22673

Leisher, C., Mangubhai, S., Hess, S., Widodo, H., Soekirman, T., Tjoe, S., Wawiyai, S., Neil Larsen, S., Rumetna, L., Halim, A., & Sanjayan, M. (2012). Measuring the benefits and costs of community education and outreach in marine protected areas. *Marine Policy*, *36*(5), 1005–1011. https://doi.org/10.1016/j.marpol.2012.02.022

Lincoln, Y. S., & Guba, E. G. (1985). *Naturalistic inquiry*. SAGE.

Liu, J., Hull, V., Batistella, M., DeFries, R., Dietz, T., Fu, F., Hertel, T., Izaurralde, R. C., Lambin, E., Li, S., Martinelli, L., McConnell, W., Moran, E., Naylor, R., Ouyang, Z., Polenske, K., Reenberg, A., de Miranda Rocha, G., Simmons, C., … Zhu, C. (2013). Framing Sustainability in a Telecoupled World. *Ecology and Society*, *18*(2). https://doi.org/10.5751/ES-05873-180226

Llopis, J. C., Chastonay, J. F., Birrer, F. C., Bär, R., Andriatsitohaina, R. N. N., Messerli, P., Heinimann, A., & Zaehringer, J. G. (2021). Year-to-year ecosystem services supply in conservation contexts in north-eastern Madagascar: Trade-offs between global demands and local needs. *Ecosystem Services*, *48*, 101249. https://doi.org/10.1016/j.ecoser.2021.101249

Lotz-Sisitka, H., Mukute, M., Chikunda, C., Baloi, A., & Pesanayi, T. (2017). Transgressing the norm: Transformative agency in community-based learning for sustainability in southern African contexts. *International Review of Education*, *63*(6), 897–914. https://doi.org/10.1007/s11159-017-9689-3

Mace, G. M. (2014). Whose conservation? *Science*, *345*(6204), 1558–1560. https://doi.org/10.1126/science.1254704

Madzwamuse, M., Rihoy, E., & Louis, M. (2020). Contested Conservation: Implications for Rights, Democratization, and Citizenship in Southern Africa. *Development*, *63*(1), 67–73. https://doi.org/10.1057/s41301-020-00237-1

Mammadova, A. (2017). Biosphere Reserve as Learning Sites for Biocultural Conservation Education; Case of Mount Hakusan Biosphere Reserve in Japan. *European Journal of Sustainable Development*, *6*(4), Article 4. https://doi.org/10.14207/ejsd.2017.v6n4p487

Marcinkowski, T., & Reid, A. (2019). Reviews of research on the attitude–behavior relationship and their implications for future environmental education research. *Environmental Education Research*, *25*(4), 459–471. https://doi.org/10.1080/13504622.2019.1634237

Mariel, J., Carrière, S. M., Penot, E., Danthu, P., Rafidison, V., & Labeyrie, V. (2021). Exploring farmers' agrobiodiversity management practices and knowledge in clove agroforests of Madagascar. *People and Nature*, *3*(4), 914–928. https://doi.org/10.1002/pan3.10238

Marshall, C., & Rossman, G. B. (1999). *Designing qualitative research* (3rd ed.). SAGE.

Massarella, K., Nygren, A., Fletcher, R., Büscher, B., Kiwango, W. A., Komi, S., Krauss, J. E., Mabele, M. B., McInturff, A., Sandroni, L. T., Alagona, P. S., Brockington, D., Coates, R., Duffy, R., Ferraz, K. M. P. M. B., Koot, S., Marchini, S., & Percequillo, A. R. (2021). Transformation beyond conservation: How critical social science can contribute to a radical new agenda in biodiversity conservation. *Current Opinion in Environmental Sustainability*, *49*, 79–87. https://doi.org/10.1016/j.cosust.2021.03.005

McCarter, J., Sterling, E. J., Jupiter, S. D., Cullman, G. D., Albert, S., Basi, M., Betley, E., Boseto, D., Bulehite, E. S., Harron, R., Holland, P. S., Horning, N., Hughes, A., Jino, N., Malone, C., Mauli, S., Pae, B., Papae, R., Rence, F., … Filardi, C. E. (2018). Biocultural approaches to developing well-being indicators in Solomon Islands. *Ecology and Society*, *23*(1). https://www.jstor.org/stable/26799068

McLean, S. (2013). The whiteness of green: Racialization and environmental education. *The Canadian Geographer / Le Géographe Canadien*, *57*(3), 354–362. https://doi.org/10.1111/cag.12025

McShane, T. O., Hirsch, P. D., Trung, T. C., Songorwa, A. N., Kinzig, A., Monteferri, B., Mutekanga, D., Thang, H. V., Dammert, J. L., Pulgar-Vidal, M., Welch-Devine, M., Peter Brosius, J., Coppolillo, P., & O'Connor, S. (2011). Hard choices: Making trade-offs between biodiversity conservation and human well-being. *Biological Conservation*, *144*(3), 966–972. https://doi.org/10.1016/j.biocon.2010.04.038

MEDD-MEN. (2022). Collaboration MEDD/MEN: la cellule interministerielle pour la realisation de la Politique Nationale d'Education Environnementale. MEDD-MEN. https://www.environnement.mg/?p=4639

Melick, D. R., Kinch, J. P., & Govan, H. (2012). How Global Biodiversity Targets Risk Becoming Counterproductive: The Case of Papua New Guinea. *Conservation and Society*, *10*(4), 344–353.

Merriam, S. B. (1998). Qualitative research and case study applications in education. Jossey-Bass.

Mgumia, F. H., & Oba, G. (2003). Potential role of sacred groves in biodiversity conservation in Tanzania. *Environmental Conservation*, *30*(3), 259–265. https://doi.org/10.1017/S0376892903000250

Mickelsson, M. (2020). 'I think it works better if we have an example to help us': Experiences in collaboratively conceptualizing the scaling of education for sustainable development practices in South Africa. *Environmental Education Research*, *26*(3), 341–358. https://doi.org/10.1080/13504622.2020.1724889

Milupi, I. D., Somers, M. J., & Ferguson, W. (2017). A review of community-based natural resource management. *Applied Ecology and Environmental Research*, *15*(4), 1121–1143. https://doi.org/10.15666/aeer/1504_11211143

Ministère de l'Éducation Nationale. (2017). *Plan Sectoriel de l'Education (2018-2022) (PSE)*. https://www.education.gov.mg/wp-content/uploads/2018/10/PSE-narratif.pdf

Mirza, N. M., & Perret-Clermont, A.-N. (2016). "Are you really ready to change?" An actor-oriented perspective on a farmers training setting in Madagascar. *European Journal of Psychology of Education*, *31*(1), 79–93.

Mittermeier, R. A., Turner, W. R., Larsen, F. W., Brooks, T. M., & Gascon, C. (2011). Global Biodiversity Conservation: The Critical Role of Hotspots. In F. E. Zachos & J. C. Habel (Eds.), *Biodiversity Hotspots: Distribution and Protection of Conservation Priority Areas* (pp. 3–22). Springer. https://doi.org/10.1007/978-3-642-20992-5_1

Monroe, M. C. (2010). Challenges for environmental education evaluation. *Evaluation and Program Planning*, *33*(2), 194–196. https://doi.org/10.1016/j.evalprogplan.2009.07.012

Monroe, M. C., & Krasny, M. E. (2016). *Across the Spectrum: Resources for Environmental Educators* (3rd ed.). North American Association for Environmental Education. https://naaee.org/eepro/resources/across-spectrum-resources-environmental-educators

Moon, K., & Blackman, D. (2014). A Guide to Understanding Social Science Research for Natural Scientists. *Conservation Biology*, *28*(5), 1167–1177. https://doi.org/10.1111/cobi.12326

Moon, K., Blackman, D. A., Adams, V. M., Colvin, R. M., Davila, F., Evans, M. C., Januchowski-Hartley, S. R., Bennett, N. J., Dickinson, H., Sandbrook, C., Sherren, K., St. John, F. A. V., van Kerkhoff, L., & Wyborn, C. (2019). Expanding the role of social science in conservation through an engagement with philosophy, methodology, and methods. *Methods in Ecology and Evolution*, *10*(3), 294–302. https://doi.org/10.1111/2041-210X.13126

Moon, K., Brewer, T., Januchowski-Hartley, S., Adams, V., & Blackman, D. (2016). A guideline to improve qualitative social science publishing in ecology and conservation journals. *Ecology and Society*, *21*(3). https://doi.org/10.5751/ES-08663-210317

Moorman, R. S. (2006). Benefits of local residents visiting La Selva Biological Station, Costa Rica. *Environmental Conservation*, *33*(2), 89–99. https://doi.org/10.1017/S0376892906002955

Myers, N., Mittermeier, R. A., Mittermeier, C. G., da Fonseca, G. A. B., & Kent, J. (2000). Biodiversity hotspots for conservation priorities. *Nature*, *403*, Article 6772. https://doi.org/10.1038/35002501

Natale, E., Astudillo, C., & Oggero, A. J. (2017). Monitoring of environmental education program in urban nature reserve "Bosque Autóctono El Espinal." *Revista Electrónica "Actualidades Investigativas En Educación," 17*(3).

Neely, A., & Nguse, T. (2015). Relationships and research methods. In T. Perreault, G. Bridge, & J. McCarthy (Eds.), *The Routledge Handbook of Political Ecology* (pp. 140–149). Routledge.

Nekaris, K. a. i., McCabe, S., Spaan, D., Ali, M. I., & Nijman, V. (2018). A novel application of cultural consensus models to evaluate conservation education programs. *Conservation Biology*, *32*(2), 466–476. https://doi.org/10.1111/cobi.13023

Nesterova, Y., & Jackson, L. (2019). Indigenous Perspectives on Ecopedagogical Literacy: The Case of Taiwan. In M. A. Peters & R. Heraud (Eds.), *Encyclopedia of Educational Innovation* (pp. 1–6). Springer. https://doi.org/10.1007/978-981-13-2262-4_72-1

Neudert, R., Goetter, J. F., Andriamparany, J. N., & Rakotoarisoa, M. (2015). Income diversification, wealth, education and well-being in rural south-western Madagascar: Results from the Mahafaly region. *Development Southern Africa*, *32*(6), 758–784. https://doi.org/10.1080/0376835X.2015.1063982

Newing, H., Eagle, C. M., Puri, R., & Watson, C. W. (2011). *Conducting Research in Conservation: Social Science Methods and Practice*. Routledge.

Niens, J. (2022). Sustainable Land Use and Health as Educational Contexts for Rural Madagascar—Effectiveness and Possibility of Implementation of Courses of Action from the Perspective of Experts and Teachers [Doctoral thesis]. Universität Göttingen.

Niens, J., Richter-Beuschel, L., Stubbe, T. C., & Bögeholz, S. (2021). Procedural Knowledge of Primary School Teachers in Madagascar for Teaching and Learning towards Land-Use- and Health-Related Sustainable Development Goals. *Sustainability*, *13*(16), Article 16. https://doi.org/10.3390/su13169036

Norris, K. S., & Jacobson, S. K. (1998). Content Analysis of Tropical Conservation Education Programs: Elements of Success. *The Journal of Environmental Education*, *30*(1), 38–44. https://doi.org/10.1080/00958969809601862

Norström, A. V., Cvitanovic, C., Löf, M. F., West, S., Wyborn, C., Balvanera, P., Bednarek, A. T., Bennett, E. M., Biggs, R., de Bremond, A., Campbell, B. M., Canadell, J. G., Carpenter, S. R., Folke, C., Fulton, E. A., Gaffney, O., Gelcich, S., Jouffray, J.-B., Leach, M., … Österblom, H. (2020). Principles for knowledge co-production in sustainability research. *Nature Sustainability*, *3*(3), Article 3. https://doi.org/10.1038/s41893-019-0448-2

Oldekop, J. A., Holmes, G., Harris, W. E., & Evans, K. L. (2016). A global assessment of the social and conservation outcomes of protected areas. *Conservation Biology*, *30*(1), 133–141. https://doi.org/10.1111/cobi.12568

Ormsby, A. (2008). Development of Environmental Education Programs for Protected Areas in Madagascar. *Applied Environmental Education & Communication*, *6*(3–4), 223–232. https://doi.org/10.1080/15330150801944515

Ørngreen, R., & Levinsen, K. (2017). Workshops as a Research Methodology. *Electronic Journal of E-Learning*, *15*(1), Article 1.

Ostrom, E., & Ahn, T. K. (Eds.). (2010). *Foundations of Social Capital*. Edward Elgar Publishing.

Ottino, P. (1974). Madagascar, les Comores et le Sud-ouest de l'Océan indien. University of Madagascar.

Paksi, A. (2020). Surviving "development". Rural development interventions, protected area management and formal education with the Khwe San in Bwabwata National Park, Namibia. University of Helsinki.

Pascual, U., Adams, W. M., Díaz, S., Lele, S., Mace, G. M., & Turnhout, E. (2021). Biodiversity and the challenge of pluralism. *Nature Sustainability*, *4*(7), Article 7. https://doi.org/10.1038/s41893-021-00694-7

PASEC. (2017). *Performances du système éducatif malgache: Compétences et facteurs de réussite au primaire.* CONFEMEN. https://www.confemen.org/wp-content/uploads/2022/07/Rapport-Madagascar.pdf

PASEC. (2020). Qualité des systèmes éducatifs en Afrique Subsaharienne Francophone. Performances et environnement de l'enseignement-apprentissage au Primaire. CONFEMEN. https://pasec.confemen.org/wp-content/uploads/sites/2/2022/08/Resume_Pasec2019_Web.pdf

Patterson, J., Lindén, E., Folkhöskola, N., Edward, J. K. P., Wilhelmsson, D., & Löfgren, I. (2009). Community-based environmental education in the fishing villages of Tuticorin and its role in conservation of the environment. *Australian Journal of Adult Learning*, *29*(2).

Penfield, T., Baker, M. J., Scoble, R., & Wykes, M. C. (2014). Assessment, evaluations, and definitions of research impact: A review. *Research Evaluation*, *23*(1), 21–32. https://doi.org/10.1093/reseval/rvt021

Pierre, M. L., Rafanambinantsoa, O. A. N., Brias-Guinart, A., Hariniaina, M., Randriamamonjy, T. T., Rojosoanotahina, C., & Vuola, M. (2021). *Building a Participatory Socio-ecological Model to Understand Natural Resource Management around Ranomafana National Park Madagascar*. ATBC, Virtual meeting. https://www.atbc2021.org/_files/ugd/98d29f_00fc300c3a694391907f36ff13cea2ff.pdf

Pietri, D., Christie, P., Pollnac, R. B., Diaz, R., & Sabonsolin, A. (2009). Information Diffusion in Two Marine Protected Area Networks in the Central Visayas Region, Philippines. *Coastal Management*, *37*(3–4), 331–348. https://doi.org/10.1080/08920750902851625

Plieninger, T., Quintas-Soriano, C., Torralba, M., Mohammadi Samani, K., & Shakeri, Z. (2020). Social dynamics of values, taboos and perceived threats around sacred groves in Kurdistan, Iran. *People and Nature*, *2*(4), 1237–1250. https://doi.org/10.1002/pan3.10158

Pollini, J., Hockley, N., Muttenzer, F., & Ramamonjisoa, B. S. (2014). The transfer of natural resource management rights to local communities. In I. R. Scales (Ed.), *Conservation adn Environmental Management in Madagascar* (pp. 196–216). Routledge.

Porcher, V., Carrière, S. M., Gallois, S., Randriambanona, H., Rafidison, V. M., & Reyes-García, V. (2022). Growing up in the Betsileo landscape: Children's wild edible plants knowledge in Madagascar. *PLOS ONE*, *17*(2), e0264147. https://doi.org/10.1371/journal.pone.0264147

Pretty, J., Adams, B., Berkes, F., de Athayde, S. F., Dudley, N., Hunn, E., Maffi, L., Milton, K., Rapport, D., Robbins, P., Sterling, E., Stolton, S., Tsing, A., Vintinner, E., & Pilgrim, S. (2009). The Intersections of Biological Diversity and Cultural Diversity: Towards Integration. *Conservation and Society*, *7*(2), 100–112.

Rabino, D. (n.d.). Forest Youth in the Island's Shadows: Rethinking Madagascar's Living Landscapes [Doctoral thesis]. University of Sussex.

Rakotomamonjy, S. N., Jones, J. P. G., Razafimanahaka, J. H., Ramamonjisoa, B., & Williams, S. J. (2015). The effects of environmental education on children's and parents' knowledge and attitudes towards lemurs in rural Madagascar. *Animal Conservation*, *18*(2), 157–166. https://doi.org/10.1111/acv.12153

Rakotonarivo, O. S., Jacobsen, J. B., Larsen, H. O., Jones, J. P. G., Nielsen, M. R., Ramamonjisoa, B. S., Mandimbiniaina, R. H., & Hockley, N. (2017a). Qualitative and Quantitative Evidence on the True Local Welfare Costs of Forest Conservation in Madagascar: Are Discrete Choice Experiments a Valid ex ante Tool? *World Development*, *94*, 478–491. https://doi.org/10.1016/j.worlddev.2017.02.009

Rakotonarivo, O. S., Jacobsen, J. B., Larsen, H. O., Jones, J. P. G., Nielsen, M. R., Ramamonjisoa, B. S., Mandimbiniaina, R. H., & Hockley, N. (2017b). Qualitative and Quantitative Evidence on the True Local Welfare Costs of Forest Conservation in Madagascar: Are Discrete Choice Experiments a Valid ex ante Tool? *World Development*, *94*, 478–491. https://doi.org/10.1016/j.worlddev.2017.02.009

Ralimanana, H., Perrigo, A. L., Smith, R. J., Borrell, J. S., Faurby, S., Rajaonah, M. T., Randriamboavonjy, T., Vorontsova, M. S., Cooke, R. S. C., Phelps, L. N., Sayol, F., Andela, N., Andermann, T., Andriamanohera, A. M., Andriambololonera, S., Bachman, S. P., Bacon, C. D., Baker, W. J., Belluardo, F., … Antonelli, A. (2022). Madagascar's extraordinary biodiversity: Threats and opportunities. *Science*, *378*(6623), eadf1466. https://doi.org/10.1126/science.adf1466

Randimbiharinirina, R. D., Richter, T., Raharivololona, B. M., Ratsimbazafy, J. H., & Schüßler, D. (2021). To tell a different story: Unexpected diversity in local attitudes towards Endangered Aye-ayes Daubentonia madagascariensis offers new opportunities for conservation. *People and Nature*, *3*(2), 484–498. https://doi.org/10.1002/pan3.10192

Randriamiharisoa, M. N., Kuhlman, A. R., Jeannoda, V., Rabarison, H., Rakotoarivelo, N., Randrianarivony, T., Raktoarivony, F., Randrianasolo, A., & Bussmann, R. W. (2015). Medicinal plants sold in the markets of Antananarivo, Madagascar. *Journal of Ethnobiology and Ethnomedicine*, *11*(1), 60. https://doi.org/10.1186/s13002-015-0046-y

Rasolojaona, J., Raharijaona, S. A., Oates, J., Quinlan, R., Rakotondrazafy, V., Mananoro, T., & Rasoarimanana, V. (2021). *Madagascar. A national analysis on the status of territories of life* (Territories of Life: 2021 Report). ICCA Consortium. https://report.territoriesoflife.org/national-and-regional-analysis/madagascar/

Raymond, C. M., Fazey, I., Reed, M. S., Stringer, L. C., Robinson, G. M., & Evely, A. C. (2010). Integrating local and scientific knowledge for environmental management. *Journal of Environmental Management*, *91*(8), 1766–1777. https://doi.org/10.1016/j.jenvman.2010.03.023

Razafindraibe, M., Kuhlman, A. R., Rabarison, H., Rakotoarimanana, V., Rajeriarison, C., Rakotoarivelo, N., Randrianarivony, T., Rakotoarivony, F., Ludovic, R., Randrianasolo, A., & Bussmann, R. W. (2013). Medicinal plants used by women from Agnalazaha littoral forest (Southeastern Madagascar). *Journal of Ethnobiology and Ethnomedicine*, *9*, 73. https://doi.org/10.1186/1746-4269-9-73

Razafindravony, L. E., Donohue, M. E., Docherty, M. A., Maggy, A. M., Lazasoa, R. S., Rafanomezantsoa, O. J. S., Ramarjaona, R. A., Randriarimanana, J. N. M., Rafanambinantsoa, A. O., Randrianarivelo, H., & Wright, P. C. (2023). Evaluating the impact of environmental education around Ranomafana National Park. *American Journal of Primatology*, *85*(5), e23477. https://doi.org/10.1002/ajp.23477

Razanatsoa, E., Andriantsaralaza, S., Holmes, S. M., Rakotonarivo, O. S., Ratsifandrihamanana, A. N., Randriamiharisoa, L., Ravaloharimanitra, M., Ramahefamanana, N., Tahirinirainy, D., & Raharimampionona, J. (2021). Fostering local involvement for biodiversity conservation in tropical regions: Lessons from Madagascar during the COVID-19 pandemic. *Biotropica*, *53*(4), 994–1003. https://doi.org/10.1111/btp.12967

Reibelt, L. M. (2017). *Communities, Teachers, Conservationists—Deconstruction and Reconstruction of Environmental Education in Madagascar* [Doctoral thesis, Universitätsverlag Hildesheim]. https://hildok.bsz-bw.de/frontdoor/index/index/searchtype/latest/rows/20/docId/764/start/13

Reibelt, L. M., Moser, G., Dray, A., Randriamalala, I. H., Chamagne, J., Ramamonjisoa, B., Barrios, L. G., Garcia, C., & Waeber, P. O. (2019). Tool development to understand rural resource users' land use and impacts on land type changes in Madagascar. *Madagascar Conservation & Development*. https://doi.org/10.4314/mcd.v0i0

Reibelt, L. M., Richter, T., Waeber, P. O., Rakotoarimanana, S., & Mantilla-Contreras, J. (2014). Environmental education in its infancy at Lake Alaotra, Madagascar. *Madagascar Conservation & Development*, *9*(2), Article 2.

Reibelt, L. M., Stoudmann, N., & Waeber, P. O. (2018). A role-playing game to learn and exchange about real-life issues. In R. Hembrom, T. Holthoff, G. Janecki, S. Laustroer, M. Rolle, & L. Zulu (Eds.), *Learn2Change—Transforming the World through Education* (pp. 163–171). Verein Niedersächsischer Bildungsinitiativen.

Reid, A., Dillon, J., Ardoin, N., & Ferreira, J.-A. (2021). Scientists' warnings and the need to reimagine, recreate, and restore environmental education. *Environmental Education Research*, *27*(6), 783–795. https://doi.org/10.1080/13504622.2021.1937577

Reyes-García, V., Fernández-Llamazares, Á., Aumeeruddy-Thomas, Y., Benyei, P., Bussmann, R. W., Diamond, S. K., García-del-Amo, D., Guadilla-Sáez, S., Hanazaki, N., Kosoy, N., Lavides, M., Luz, A. C., McElwee, P., Meretsky, V. J., Newberry, T., Molnár, Z., Ruiz-Mallén, I., Salpeteur, M., Wyndham, F. S., … Brondizio, E. S. (2022). Recognizing Indigenous peoples' and local communities' rights and agency in the post-2020 Biodiversity Agenda. *Ambio*. https://doi.org/10.1007/s13280-021-01561-7

Richter, T., Rendigs, A., & Maminirina, C. P. (2015). Conservation Messages in Speech Bubbles–Evaluation of an Environmental Education Comic Distributed in Elementary Schools in Madagascar. *Sustainability*, *7*(7), Article 7. https://doi.org/10.3390/su7078855

Rocha, R., Fernández-Llamazares, Á., López-Baucells, A., Andriamitandrina, S. F. M., Andriatafika, Z. E., Temba, E. M., Torrent, L., Burgas, D., & Cabeza, M. (2021). Human-Bat Interactions in Rural Southwestern Madagascar through a Biocultural Lens. *Journal of Ethnobiology*, *41*(1), 53–69. https://doi.org/10.2993/0278-0771-41.1.53

Rodrigues, C., & Lowan-Trudeau, G. (2021). Global politics of the COVID-19 pandemic, and other current issues of environmental justice. *The Journal of Environmental Education*, *52*(5), 293–302. https://doi.org/10.1080/00958964.2021.1983504

Root, E. (2010). This Land Is Our Land? This Land Is Your Land: The Decolonizing Journeys of White Outdoor Environmental Educators. *Canadian Journal of Environmental Education*, *15*, 103–119.

Rozzi, R., Massardo, F., Anderson, C., Heidinger, K., & Silander, J. (2006). Ten Principles for Biocultural Conservation at the Southern Tip of the Americas: The Approach of the Omora Ethnobotanical Park. *Ecology and Society*, *11*(1). https://doi.org/10.5751/ES-01709-110143

Rozzi, R., May Jr., R. H., Chapin III, F. S., Massardo, F., Gavin, M. C., Klaver, I. J., Pauchard, A., Nuñez, M. A., & Simberloff, D. (Eds.). (2018). *From Biocultural Homogenization to Biocultural Conservation* (1st ed.). Springer Cham.

Rutte, C. (2011). The sacred commons: Conflicts and solutions of resource management in sacred natural sites. *Biological Conservation*, *144*(10), 2387–2394. https://doi.org/10.1016/j.biocon.2011.06.017

Saif, O., Keane, A., & Staddon, S. (2022). Making a case for the consideration of trust, justice, and power in conservation relationships. *Conservation Biology*, *36*(4), e13903. https://doi.org/10.1111/cobi.13903

Sandbrook, C., Adams, W. M., Büscher, B., & Vira, B. (2013). Social Research and Biodiversity Conservation. *Conservation Biology*, *27*(6), 1487–1490. https://doi.org/10.1111/cobi.12141

Sandeloswski, M. (1986). The problem of rigor in qualitative research. *Advances in Nursing Science*, *8*, 27–37.

Sauve, L. (2005). Currents in Environmental Education: Mapping a Complex and Evolving Pedagogical Field. *Canadian Journal of Environmental Education*, *10*(1), 11–37.

Sauve, L. (2014). Educación ambiental y ecociudadania. Dimensiones claves de un proyecto político-pedagógico. *Revista Científica*, *18*(1), Article 1. https://doi.org/10.14483/23448350.5558

Scales, I. R. (2012). Lost in translation: Conflicting views of deforestation, land use and identity in western Madagascar. *The Geographical Journal*, *178*(1), 67–79.

Scales, I. R. (2014a). A brief history of the state and the politics of natural resource use in Madagascar. In I. R. Scales (Ed.), *Conservation and Environmental Management in Madagascar* (pp. 153–169). Routledge.

Scales, I. R. (2014b). The future of conservation and development in Madagascar: Time for a new paradigm? *Madagascar Conservation & Development*, *9*(1), Article 1.

Schusler, T. M., Krasny, M. E., & Decker, D. J. (2017). The autonomy-authority duality of shared decision-making in youth environmental action. *Environmental Education Research*, *23*(4), 533–552. https://doi.org/10.1080/13504622.2016.1144174

Schusler, T. M., Krasny, M. E., Peters, S. J., & Decker, D. J. (2009). Developing citizens and communities through youth environmental action. *Environmental Education Research*, *15*(1), 111–127. https://doi.org/10.1080/13504620802710581

Schüßler, D., Richter, T., & Mantilla-Contreras, J. (2019). Educational Approaches to Encourage Pro-Environmental Behaviors in Madagascar. *Sustainability*, *11*(11), Article 11. https://doi.org/10.3390/su11113148

Scully, A. (2012). Decolonization, Reinhabitation and Reconciliation: Aboriginal and Place-Based Education. *Canadian Journal of Environmental Education (CJEE)*, *17*(0), Article 0.

Shackleton, R. T., Walters, G., Bluwstein, J., Djoudi, H., Fritz, L., Lafaye de Micheaux, F., Loloum, T., Nguyen, V. T. H., Rann Andriamahefazafy, M., Sithole, S. S., & Kull, C. A. (2023). Navigating power in conservation. *Conservation Science and Practice*, *5*(3), e12877. https://doi.org/10.1111/csp2.12877

Shen, X., Liu, M., Hanson, J. O., Wang, J., Locke, H., Watson, J. E. M., Ellis, E. C., Li, S., & Ma, K. (2023). Countries' differentiated responsibilities to fulfill area-based conservation targets of the Kunming-Montreal Global Biodiversity Framework. *One Earth*, *6*(5), 548–559. https://doi.org/10.1016/j.oneear.2023.04.007

Shenton, A. K. (2004). Strategies for ensuring trustworthiness in qualitative research projects. *Education for Information*, *22*(2), 63–75. https://doi.org/10.3233/EFI-2004-22201

Sherrow, H. M. (2010). Conservation Education and primates: Twenty-first century challenges and opportunities. *American Journal of Primatology*, *72*(5), 420–424. https://doi.org/10.1002/ajp.20788

Shrestha, S. (2015). The role of environmental education for biodiversity conservation: A case study in the protected areas of Nepal [Doctoral thesis, Arizona State University]. https://keep.lib.asu.edu/items/153700

Skerrett, M. (2018). Pedagogical intentions: Enacting a "refreshed" bicultural curriculum positioned at the crossroads of colonial relations, biocultural education, and critical literacy. *Early Childhood Folio*, *22*(1), 3. https://doi.org/10.18296/ecf.0045

Smith, T. A. (2014). The student is not the fisherman: Temporal displacement of young people's identities in Tanzania. *Social & Cultural Geography*, *15*(7), 786–811. https://doi.org/10.1080/14649365.2014.926562

Soulé, M. E. (1985). What Is Conservation Biology? *BioScience*, *35*(11), 727–734. https://doi.org/10.2307/1310054

St John, F. A. V. S., Edwards-Jones, G., Jones, J. P. G., John, F. A. V. S., Edwards-Jones, G., & Jones, J. P. G. (2010). Conservation and human behaviour: Lessons from social psychology. *Wildlife Research*, *37*(8), 658–667. https://doi.org/10.1071/WR10032

Sterling, E. J., Filardi, C., Toomey, A., Sigouin, A., Betley, E., Gazit, N., Newell, J., Albert, S., Alvira, D., Bergamini, N., Blair, M., Boseto, D., Burrows, K., Bynum, N., Caillon, S., Caselle, J. E., Claudet, J., Cullman, G., Dacks, R., … Jupiter, S. D. (2017). Biocultural approaches to well-being and sustainability indicators across scales. *Nature Ecology & Evolution*, *1*(12), 1798–1806. https://doi.org/10.1038/s41559-017-0349-6

Stern, P. C., Dietz, T., Abel, T., Guagnano, A., & Kalof, L. (1999). A Value-Belief-Norm Theory of Support for Social Movements: The Case of Environmentalism. *Research in Human Ecology*, *6*(2), 81–97.

Stoudmann, N., Reibelt, L. M., Kull, C. A., Garcia, C. A., Randriamalala, M., & Waeber, P. O. (2019). Biting the Bullet: Dealing with the Annual Hunger Gap in the Alaotra, Madagascar. *Sustainability*, *11*(7), Article 7. https://doi.org/10.3390/su11072147

Superina, M., Duarte, A. C., & Trujillo, F. (2019). Connecting research, management, education and policy for the conservation of armadillos in the Orinoco Llanos of Colombia. *Oryx*, *53*(1), 17–26. https://doi.org/10.1017/S0030605318000790

Sutherland, W. J., Dicks, L. V., Everard, M., & Geneletti, D. (2018). Qualitative methods for ecologists and conservation scientists. *Methods in Ecology and Evolution*, *9*(1), 7–9. https://doi.org/10.1111/2041-210X.12956

Tengö, M., Austin, B. J., Danielsen, F., & Fernández-Llamazares, Á. (2021). Creating Synergies between Citizen Science and Indigenous and Local Knowledge. *BioScience*, *71*(5), 503–518. https://doi.org/10.1093/biosci/biab023

Tengö, M., Hill, R., Malmer, P., Raymond, C. M., Spierenburg, M., Danielsen, F., Elmqvist, T., & Folke, C. (2017). Weaving knowledge systems in IPBES, CBD and beyond—Lessons learned for sustainability. *Current Opinion in Environmental Sustainability*, *26–27*, 17–25. https://doi.org/10.1016/j.cosust.2016.12.005

TENK. (2019). *The ethical principles of research with human participants and ethical review in the human sciences in Finland*. Finnish National Board on Research Integrity. https://tenk.fi/en/advice-and-materials/guidelines-ethical-review-human-sciences

Thomas, R. E. W., Teel, T., Bruyere, B., & Laurence, S. (2019). Metrics and outcomes of conservation education: A quarter century of lessons learned. *Environmental Education Research*, *25*(2), 172–192. https://doi.org/10.1080/13504622.2018.1450849

Thompson, K.-L., Hill, C., Ojeda, J., Ban, N. C., & Picard, C. R. (2020). Indigenous food harvesting as social–ecological monitoring: A case study with the Gitga'at First Nation. *People and Nature*, *2*(4), 1085–1099. https://doi.org/10.1002/pan3.10135

Tobin, K. (2009). Tuning into others' voices: Radical listening, learning from difference, and escaping oppression. *Cultural Studies of Science Education*, *4*(3), 505–511. https://doi.org/10.1007/s11422-009-9218-1

Toomey, A. H., Knight, A. T., & Barlow, J. (2017). Navigating the Space between Research and Implementation in Conservation. Conservation Letters, 10(5), 619–625. https://doi.org/10.1111/conl.12315

Torkar, G., & Valenčak, S. (2016). The Importance of Nature Protection Areas for Conservation Education: The Case of Kozjansko Regional Park in Slovenia. Rural Environment, Education, Personality, 44–49.

Torrents-Ticó, M., Fernández-Llamazares, Á., Burgas, D., Nasak, J. G., & Cabeza, M. (2022). Biocultural conflicts: Understanding complex interconnections between a traditional ceremony and threatened carnivores in north Kenya. Oryx, 1–10. https://doi.org/10.1017/S0030605322000035

Trewhella, W. J., Rodriguez-Clark, K. M., Corp, N., Entwistle, A., Garrett, S. R. T., Granek, E., Lengel, K. L., Raboude, M. J., Reason, P. F., & Sewall, B. J. (2005). Environmental Education as a Component of Multidisciplinary Conservation Programs: Lessons from Conservation Initiatives for Critically Endangered Fruit Bats in the Western Indian Ocean. Conservation Biology, 19(1), 75–85. https://doi.org/10.1111/j.1523-1739.2005.00548.x

TriCouncil Policy Statement: Ethical Conduct for Research Involving Humans. (2022). Canadian Institutes of Health Research, Natural Sciences and Engineering Research Council of Canada, and Social Sciences and Humanities Research Council of Canada. https://ethics.gc.ca/eng/documents/tcps2-2022-en.pdf

Tuck, E., McKenzie, M., & McCoy, K. (2014). Land education: Indigenous, post-colonial, and decolonizing perspectives on place and environmental education research. Environmental Education Research, 20(1), 1–23. https://doi.org/10.1080/13504622.2013.877708

Turner, N. J., Cuerrier, A., & Joseph, L. (2022). Well grounded: Indigenous Peoples' knowledge, ethnobiology and sustainability. People and Nature, 4(3), 627–651. https://doi.org/10.1002/pan3.10321

UNDP. (2021). Madagascar—Human Development Index. https://hdr.undp.org/data-center/human-development-index#/indicies/HDI

UNEP. (1972). Stockholm declaration on the human environment (United Nations Conference on the Human Environment). New York: United Nations Environment Programme.

UNEP, U. N. (2005). UNEP Strategy for Environmental Education and Training. UNEP. http://www.unep.org/resources/publication/unep-strategy-environmental-education-and-training

UNESCO. (1977). "The Tbilisi Declaration" in Intergovernmental Conference on Environmental Education (pp. 14–16). UNESCO, UNEP. https://www.gdrc.org/uem/ee/EE-Tbilisi_1977.pdf

UNESCO. (2020a). Education for sustainable development: A roadmap. UNESCO. https://unesdoc.unesco.org/ark:/48223/pf0000374802

UNESCO. (2020b). Global Education Monitoring Report 2020: Inclusion and education: All means all. UNESCO. https://gem-report-2020.unesco.org/

UNESCO. (2022). *Education and awareness*. https://www.unesco.org/en/biodiversity/education

UNESCO-UNEP. (1975). *The Belgrade Charter: A framework for environmental education*. https://unesdoc.unesco.org/ark:/48223/pf0000017772?posInSet=1&queryId=091ac43b-e5e4-4392-98f3-6944e43683e1

Velempini, K., Martin, B., Smucker, T., Randolph, A. W., & Henning, J. E. (2018). Environmental education in southern Africa: A case study of a secondary school in the Okavango Delta of Botswana. *Environmental Education Research*, *24*(7), 1000–1016. https://doi.org/10.1080/13504622.2017.1377158

Venart, L. C., & Reuter, K. (2014). Education in Madagascar: A Guide on the State of the Educational System, Needed Reforms and Strategies for Improvement. *University of Mauritius Research Journal*, *20*.

Vieilledent, G., Grinand, C., Rakotomalala, F. A., Ranaivosoa, R., Rakotoarijaona, J.-R., Allnutt, T. F., & Achard, F. (2018). Combining global tree cover loss data with historical national forest cover maps to look at six decades of deforestation and forest fragmentation in Madagascar. *Biological Conservation*, *222*, 189–197. https://doi.org/10.1016/j.biocon.2018.04.008

Vieilledent, G., Nourtier, M., Grinand, C., Pedrono, M., Clausen, A., Rabetrano, T., Rakotoarijaona, J.-R., Rakotoarivelo, B., Rakotomalala, F. A., Rakotomalala, L., Razafimpahanana, A., Ralison, J. M., & Achard, F. (2020). *It's not just poverty: Unregulated global market and bad governance explain unceasing deforestation in Western Madagascar* (p. 2020.07.30.229104). bioRxiv. https://doi.org/10.1101/2020.07.30.229104

Vuola, M., & Brias-Guinart, A. (2019). Dealing with discomfort: How to move from theory to action in research ethics? *Convivial Thinking*. https://convivialthinking.org/index.php/2019/06/28/dealing-with-discomfort-how-to-move-from-theory-to-action-in-research-ethics/

Vuola, M., & Pyhälä, A. (2016). Local community perceptions of conservation policy: Rights, recognition and reactions. *Madagascar Conservation & Development*, *11*(2), Article 2.

Waeber, P. O., Rafanoharana, S., Rasamuel, H. A., & Wilmé, L. (2019). Parks and Reserves in Madagascar: Managing Biodiversity for a Sustainable Future. In *Protected Areas, National Parks and Sustainable Future*. IntechOpen. https://doi.org/10.5772/intechopen.85348

Waeber, P. O., Wilmé, L., Mercier, J.-R., Camara, C., & Lowry II, P. P. (2016). How Effective Have Thirty Years of Internationally Driven Conservation and Development Efforts Been in Madagascar? *PLoS ONE*, *11*(8), e0161115. https://doi.org/10.1371/journal.pone.0161115

Wals, A. E. J., & Benavot, A. (2017). Can we meet the sustainability challenges? The role of education and lifelong learning. *European Journal of Education*, *52*(4), 404–413. https://doi.org/10.1111/ejed.12250

Wals, A. E. J., Geerling-Eijff, F., Hubeek, F., Kroon, S. van der, & Vader, J. (2008). All Mixed Up? Instrumental and Emancipatory Learning Toward a More Sustainable World: Considerations for EE Policymakers. *Applied Environmental Education & Communication*, *7*(3), 55–65. https://doi.org/10.1080/15330150802473027

Walter, P. (2009). Local knowledge and adult learning in environmental adult education: Community-based ecotourism in southern Thailand. *International Journal of Lifelong Education*, *28*(4), 513–532. https://doi.org/10.1080/02601370903031363

Ward, C., Stringer, L. C., & Holmes, G. (2018a). Protected area co-management and perceived livelihood impacts. *Journal of Environmental Management*, *228*, 1–12. https://doi.org/10.1016/j.jenvman.2018.09.018

Ward, C., Stringer, L., & Holmes, G. (2018b). Changing governance, changing inequalities: Protected area co-management and access to forest ecosystem services: a Madagascar case study. *Ecosystem Services*, *30*, 137–148. https://doi.org/10.1016/j.ecoser.2018.01.014

Ward-Smith, C., Olvitt, L., & Akhurst, J. (2020). Toward Decolonizing Nature-Based Pedagogies: The Importance of Sociocultural History and Socio-materiality in Mediating Children's Connectednesswith-Nature. In A. Cutter-Mackenzie-Knowles, K. Malone, & E. Barratt Hacking (Eds.), *Research Handbook on Childhoodnature* (pp. 1549–1574). Springer, Cham.

Webb, K., Trienekens, N., Plude, P., Jennings, J., & Nirmal, P. (2022). *The Essentials of Radical Listening*. Health in Harmony. https://radicallistening.org/wp-content/uploads/2022/06/Radical-Listening-Manual_Essentials-Level-1.docx-1.pdf

Weiskopf, S., Cushing, J., Morelli, T. L., & Myers, B. (2021). Climate change risks and adaptation options for Madagascar. *Ecology and Society*, *26*(4). https://doi.org/10.5751/ES-12816-260436

West, S. E. (2015). Understanding participant and practitioner outcomes of environmental education. *Environmental Education Research*, *21*(1), 45–60. https://doi.org/10.1080/13504622.2013.879695

Western, D., Pearl, M. C., Pimm, S. L., & Walker, I. (1989). An agenda for conservation action. In D. Western & M. C. Pearl (Eds.), *Conservation for the Twenty-First Century* (pp. 304–323). Oxford University Press.

White, R. L., Eberstein, K., & Scott, D. M. (2018). Birds in the playground: Evaluating the effectiveness of an urban environmental education project in enhancing school children's awareness, knowledge and attitudes towards local wildlife. *PLOS ONE*, *13*(3), e0193993. https://doi.org/10.1371/journal.pone.0193993

Wiley, A. S., & Cullin, J. M. (2016). What Do Anthropologists Mean When They Use the Term Biocultural? *American Anthropologist*, *118*(3), 554–569. https://doi.org/10.1111/aman.12608

Wilhere, G. F., Maguire, L. A., Michael Scott, J., Rachlow, J. L., Goble, D. D., & Svancara, L. K. (2012). Conflation of values and science: Response to Noss et al. *Conservation Biology*, *26*(5), 943–944. https://doi.org/10.1111/j.1523-1739.2012.01900.x

Winter, P. L., Selin, S., Cerveny, L., & Bricker, K. (2020). Outdoor Recreation, Nature-Based Tourism, and Sustainability. *Sustainability*, *12*(1), Article 1. https://doi.org/10.3390/su12010081

Wyborn, C., Montana, J., Kalas, N., Cisneros, F. D., Clement, C., Tort, S. I., Knowles, N., Louder, E., Balan, M., Chambers, J. M., Christel, L., Deplazes-Zemp, A., Forsyth, T., Henderson, G., Lim, M., Harms, M. J. M., Merçon, J., Nuesiri, E., Pereira, L., … Wood, S. (2020). *Research and action agenda for sustaining diverse and just futures for life on Earth. Biodiversity Revisited*. https://research.wur.nl/en/publications/research-and-action-agenda-for-sustaining-diverse-and-just-future

Zafra-Calvo, N., Balvanera, P., Pascual, U., Merçon, J., Martín-López, B., van Noordwijk, M., Mwampamba, T. H., Lele, S., Ifejika Speranza, C., Arias-Arévalo, P., Cabrol, D., Cáceres, D. M., O'Farrell, P., Subramanian, S. M., Devy, S., Krishnan, S., Carmenta, R., Guibrunet, L., Kraus-Elsin, Y., … Díaz, S. (2020). Plural valuation of nature for equity and sustainability: Insights from the Global South. *Global Environmental Change*, *63*, 102115. https://doi.org/10.1016/j.gloenvcha.2020.102115

SUPPLEMENTARY MATERIALS

Appendix S1. Methodology for the systematic review (Box 1)

Authorship for this work: Conceptualisation (AB-G, AP, MC), Data collection (AB-G), Data analysis (AB-G)

On May 2018, we did searched the literature systematically to retrieve peer-reviewed publications in English. First, we identified the appropriate search terms to capture empirical research evaluating environmental education programs implemented close or within protected areas. Then, we searched Web of Science (www.webofknowledge.com) combining a three sets of terms: environmental education and selected synonyms, evaluation and synonyms, protected area and synonyms. We used the following strings, without restriction on publication year:

("conservation education*" OR "environmental education*" OR "biodiversity education*" OR "community education*" OR "education* for sustainable development") AND (impact* OR assess* OR evaluat* OR effectiv* OR outcome* OR effect* OR cost* OR benefit*) AND ("protected area*" OR park* OR reserve*)

We obtained 874 citation records. Next, we reviewed the titles and abstracts for relevance, using a three inclusion criteria. We included studies that:

1. implemented an environmental education program
2. assessed the program
3. was located inside or near a natural protected area

Common reasons for exclusion were that the study did not implement or assess an environmental education program, the program was not located inside or near a protected area, or did not report on primary research (e.g. was a literature review). After full review, the final sample included 40 articles published in English between 1994 and 2018.

Appendix S2. MaTsi (Mampifandray ny Tsirairay) Report*

**The current version is a simplified version to the one sent to conservation practitioners and other participants in March 2020.*

The aim of the project was to create a model of the natural resource use around the Ranomafana National Park. The qualitative model included the Actors, Resources, Drivers and Interactions (ARDI) influencing the natural resource use in the socio-ecological system in Ranomafana following a methodology developed by Etienne et al. (2011). The model was built with participatory methodology consisting of nine consequent workshops with two local communities and other stakeholders: conservation and development NGOs, local associations, government representatives, Madagascar National Parks, and Malagasy researchers. By giving everybody a chance to express themselves, we aimed to include different forms of knowledge (local environmental knowledge, expert knowledge of conservation and NGO practitioners and government representatives as well as scientific knowledge) into one model. We also wanted to offer a chance for all these stakeholders to meet and discuss the problems that affect all (see Recommendations).

The purpose of this report is to share the results of the project with the NGO's and researchers who participated in the workshops. In the last workshop, it was proposed to collaboratively draw policy recommendations continuing from this project. With this report, we want to open discussion on if and how to move forward. We invite suggestions on what the policy recommendations would be and to whom would they be targeted.

In any case, we will share the results also with all the other participants of the workshops (including for example MNP) later on. This can be done either collectively whomever of you are interested or we can present it on behalf of ourselves only.

Apart from this, we would be delighted if any of your organisations wish to use this model in your work. You are free to present the picture of the model (page 3) as long as the authors are acknowledged (Brias Guinart & Vuola 2020). Information on the copy rights at the end.

Helsinki, March 2020

Introduction to MaTsi project

This project was carried out during November – December in villages around Ranomafana National Park (Fianarantsoa Region, Madagascar).

Organizing team. This is a research project from Helsinki University (Finland), funded by FinCEAL Plus BRIDGES project. The members of the team are:

Aina Brias-Guinart and **Marketta Vuola**, team leaders
PhD students, Global Change and Conservation Lab, Helsinki University

Odile Andrianirina Rafanambinantsoa and Matthieu Pierre, research assistants
Master Students, University of Fianarantsoa

Caroline Rojosoanotahina, Maria Hariniaina & Toky T. Randriamamonjy, workshop facilitators
Respectively, PhD student, University of Fianarantsoa and Master students at University of Antananarivo and University of Tamatave

Participants. Two groups of participants took part of the project: (1) Local communities from Mangevo village / Vohimarina area and from Amboditanimena village, and (2) Expert group formed by: conservation and development NGOs, local associations, government representatives, Madagascar National Parks, and Malagasy researchers.

Giving the time constraints, only two villages/areas participated in this project. However, the model developed is not a representation of one or the other, but we chose these two distinctive villages to have the best possible representation of the range of conditions that happen around Ranomafana National Park.

Picture of the model

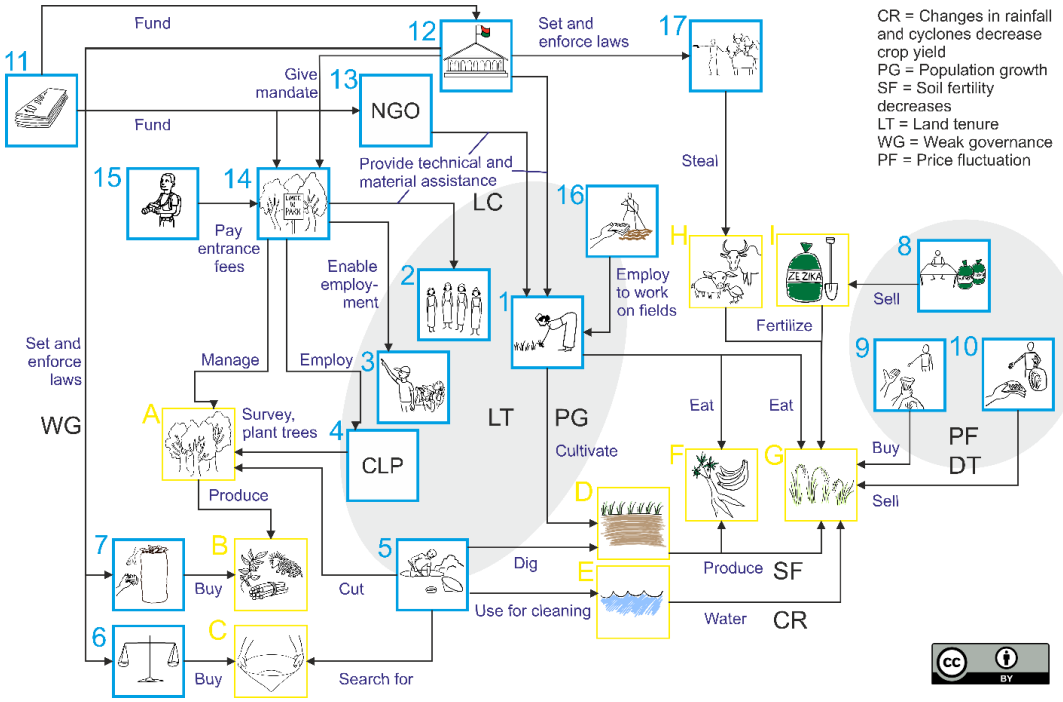

Description of the units

Actors: 1. Local communities*, 2. Association*: this are created for the purpose of MNP's projects, 3. Local guides*, 4. CLP* (Comité Local du Parc), 5. Gold miner*, 6. Gold buyer*, 7. Buyer of forest products*, 8. Seller of fertilizer (*zezika*)*, 9. Buyer of rice*, 10. Seller of rice*, 11. Donors, 12. Government: at all levels, from commune, region, district and national level, 13. NGOs , 14. MNP, 15. Tourists, 16. Employer: land owner who employs local communities to work on his/her field, 17. Thief (*dahalo*)

*In some cases, 1-5 & 8-10 can be the same person.

Note: In workshop A6, a new actor was suggested "Experts and Innovative people" which does not appear in the final model as it was not very clear the interactions of this actor with the rest of the elements already in the model.

Also, the actor "Technicians" has been removed from the final model, and translated into an interaction between the Park, the government and the NGOs and the local communities on "provide technical and material assistance".

Resources: A. Forest, B. Forest products: including medicinal plants, different types of wood, as well as animals, C. Gold, D. Soil, E. Water, F. Other crops such as banana or cassava, G. Rice, H. Livestock such as zebús, pigs or chickens, I. Fertilizer (*zezika*)

Drivers:

CR = Changes in rainfall (increase or decrease) and cyclones decrease the crop yield

PG = Population growth, but the available land area does not increase

SF = Soil fertility decreases, when the same field is cultivated many years without a break

LT = Land tenure mechanisms not clear, land tenure is problematic and this causes jealousy between people -> a Dina is needed but there are also unclarities how it is used aside the national law

WG = Weak governance. Corruption in government institutions is frequent and at every natural resource extractive sector (gold, charcoal...) investigation and arrests only occur at the lowest steps of the value chain (i.e. local villagers), not at the level of "patrons" or buyers at the next steps of the value chain.

PF = Price fluctuation. During the harvest the price of rice is low but the farmers need to sell to get cash. When farmers have used their own stock they need to buy rice but at this time the price is high.

DT = Distance to markets. Intermediaries take most of the profit.

LC = Lack of communication between villages and development projects (by NGOs or MNP). Projects are not matched with the local needs. Funds from donors do not benefit local communities for several reasons: they are targeted to too few villages for too short time, management of projects and funds is not always transparent.

Interactions: interactions among actors and resources are marked with arrows and explained with dark blue verbs. Some clarifications:

12-14: Government sets the legislation and gives the mandate to MNP to manage the forest as a National Park.

11-12, 11-13, 11-14: Donors fund NGOs, MNP and the Government to provide technical and material assistance (e.g. technicians, seeds, animals...) to local communities. However, NGO's, MNP and the Government are constrained with the donors' wishes, e.g. donors decide on the duration of projects.

14-2: MNP channels funds to the communities via community associations. However, local communities do not feel the ownership of these associations. The interaction between MNP and local communities is challenged. The freezing of 50 % DEAP system deteriorates local communities' trust towards MNP.

H-G: Domestic animals fertilize rice fields naturally but as bandits increasingly steal domestic animals (17-H) the farmers need to buy fertilizer (8-I).

Recommendations from the communities

During the last workshop (A7), a group of representatives from Mangevo and Amboditanimena villages discussed possibilities for a sustainable future, around two questions: i. What should be change from this model to solve this problem?; ii. What can you contribute to accomplish this change? Those suggestions were presented in the afternoon session in front of the "expert" group. These were the solutions that were mentioned:

Training

- The production of our land is not enough. The government should help communities providing a technician that would teach us alternatives on how to produce fertilizer without domestic animals and how to do compost. Additionally, the government could fund the price of the fertilizer in the market (*zezika*).
- Alternatively, we would like that projects or NGOs would provide training to someone from the community, to be the technician.
- The national park and the government should provide formation to the local communities on forest management and farming techniques. Once the local communities are able to increase their productivity, they will be able to protect the forest. And they would also teach their children about the protection of the forests.

Protection against robberies

- There has been increasing cases of robberies, and the army seems to not be enough. This is a great problematic for us, as we depend totally on farming and cultivating, and if we don't have domestic animals, the work on the field becomes difficult, and the amount of products decreases. We propose that the mayor, as representative of the government, but also the Chef Region and Chef District, should ensure that there is a monitoring to prevent robberies. In exchange, local communities could pay for a protection fee if there are not robberies in the area.

Provision of material and funds

- The national park management should provide livestock to breed and seeds, as a compensation of the limitation of land by the park. Local communities want to protect the environment if there is a project that can help them, for example by realizing tree plantations.
- Up to now, the donors provide the money to the government, and later it arrives to the local communities. But only a small percentage of what they give, actually gets to the local communities. We would like that the money would go directly to the local communities association.

Regulation of price

- An association should be created to buy/sell rice at a regulated price. This association could be funded by the government or the national park. Otherwise, in many cases, the buyers exploit the farmers, by buying them the products in a very cheap price, and selling them very expensive.
- In addition, the local communities said that if the government, MNP or NGOs help them to solve these problems, they will ensure that their children go to school, to increase their level education.

Methods in detail

Objectives and Steps. The project aimed to collectively construct a conceptual model of the Ranomafana socioecological system, following a methodology developed by Etienne et al. (2011) called ARDI, an acronym of the four French words "*Acteurs, Ressources, Dynamiques and Interactions*". This model was built in three phases: 1. Identification of the problem, 2. Creation of the model, 3. Validation of the model.

Phase 1. Identification of the problem

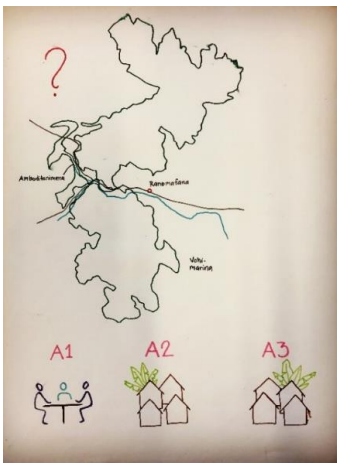

The first step aimed to identify which was the problem around natural resource use.

Workshop A1 [19. 11.19]: Problem definition with experts

Workshop A2 [23-24.11.19]: Problem definition with local communities from Vohimarina (men and women separately)

Workshop A3 [27.11.19]: Problem definition with local communities from Amboditanimena (men and women separately)

After these three workshops, the research team came up with a problem: "The land does not produce enough (in terms of quality and quantity) to support our families", that guided the following steps.

Phase 2. Creation of the model

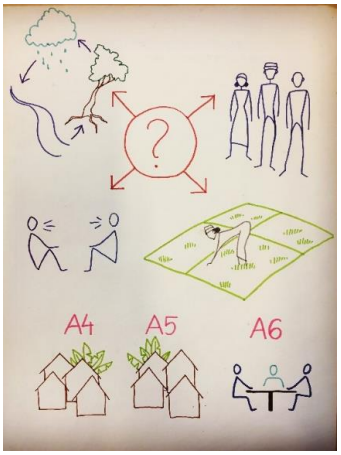

In each of the villages, eight people were invited to each of the workshops, and the participants defined the most important 1) actors, 2) resources and 3) interactions relating to the previously defined problem.

Workshop A4 [4-5.12.19]: ARDI workshop with local communities from Vohimarina (men and women separately).

Workshop A5 [7.12.19]: ARDI workshop with local communities from Amboditanimena

After this step, two different models were created (one in each village), and the research team combined them into a single one.

Workshop A6 [11.12.19]: During the morning session, the participants from the group of experts added some elements in the model. Based on the discussion occurred, the research team added later the 4) dynamics into the model.

Phase 3. Validation of the model

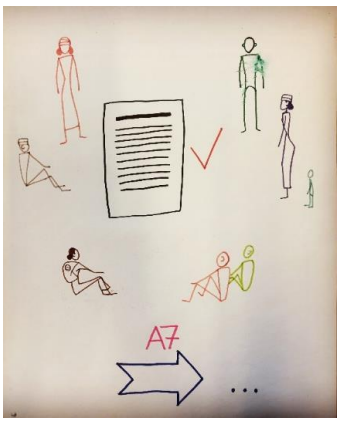

Workshop A7 [11.12.19]: The final model was validated by all the participants. During the afternoon session, there was an open discussion amongst all the participants on what should be changed for a sustainable future, using the model as a support to guide the discussion.

Use of the model

If you wish to use the picture of the model, you are free to do so according to the conditions of the Creative Commons Attribution 4.0 International License. To mark the credits, please indicate the credits as:

Brias Guinart & Vuola 2020. Licensed under the Creative Commons Attribution 4.0 International Lice, http://creativecommons.org/licenses/by/4.0/.

Appendix S3. Ethical guidelines

This is the written form provided to of Chapter II to inform them about our ethical guidelines. The document was available in French and English. A similar version was adapted for participants in the Finnish context in Chapter III. To check the ethical guidelines for Chapter IV, refer to CIV: Appendix S2.

PRIVACY NOTICE FOR SCIENTIFIC RESEARCH
EU GENERAL DATA PROTECTION REGULATION
ART. 12–14
SEPTEMBER 2019

Information for participants of the research project "Education for conservation: understanding the theories of change of Education Programs for Biodiversity Conservation"

You are taking part in a scientific research conducted at the University of Helsinki (Finland). The research project involves the processing of personal data. This notice describes how your personal data will be processed in the study.

Participation in the study is voluntary. There will be no negative consequences for you if you choose not to participate in the study or if you withdraw from the study. For more information on your rights and how you can affect the processing of your personal data, please see the end of this notice (section 11).

1. Contact details

Data controller

University of Helsinki
Address: P.O. Box 3 (Fabianinkatu 33), 00014 University of Helsinki, Finland

Data Protection Officer

Lotta Ylä-Sulkava, Email: tietosuoja@helsinki.fi

Contact person in matters concerning the project

Name: Aina Brias Guinart, PhD student
Address: Viikinkaari 1, Biocentre 3, 00790 University of Helsinki, Finland
+261(0)348945084 or +358(0)401643152; aina.briasguinart@helsinki.fi

Principal investigators

Dr. Aili Pyhälä. Email : aili.pyhala@helsinki.fi
Faculty of Social Sciences, Helsinki University (Finland)

Dr. Mar Cabeza. Email: email: mar.cabeza@helsinki.fi
Global Change and Conservation Research Group, http://gcc.it.helsinki.fi/
Faculty of Biological and Environmental Sciences, Helsinki University (Finland)

2. Description of the study and the purposes of processing personal data

This project is part of a larger PhD research project that addresses the role of education as a tool for biodiversity conservation, using Madagascar as a case study. Previous research has suggested that there is a lack of scientific evidence of the impacts of education programs, particularly those used around protected areas to encourage pro-environmental behaviour. Our objective is to better understand what are the theories of change behind these education programs. For this reason, we are interested to hear the narratives of practitioners, your experiences with different education activities, and the barriers that may exist to achieve your long-term goal.

The data for the study will be collected through interviews with key informants involved in conservation education. In order to follow-up later during the course of the project, we will collect some personal data (e.g. name and contact details). This personal data will be handled separately from the interview responses and we will ensure that no individual respondent can be identified by outsiders. We will pseudonymize the data and store the personal data separately from the responses to the interview. The data will be stored in the secure servers of the University of Helsinki.

3. People processing personal data in the study

The people that have the right to process the personal data during the course of the project are the researchers and research assistants working for this specific project under the Development Studies, Faculty of Social Sciences and Global Change and Conservation Research Group, Faculty of Biological and Environmental Sciences, University of Helsinki.

4. Duration of the study

This project is part of a larger PhD project that has funding until the end of December 2021, but might continue working later on the same thematic.

Duration of the processing of personal data:

The personal data will be stored for as long as deemed relevant for this study (until end of 2021) or for any follow up study in relation to the same research theme. Once deemed the data is of no use any longer, i.e., there is no further need to contact the participants in the study, the direct identifiers will be destroyed.

5. Lawful basis of processing

Personal data is processed on the following basis, which is based on Article 6(1) of the General Data Protection Regulation:

☐ performance of a task carried out in the public interest or in the exercise of official authority vested in the controller:

- ☐ scientific or historical research purposes or statistical purposes
- ☐ archiving of research materials or cultural heritage materials

☒ participant's consent
☐ compliance with a legal obligation to which the controller is subject
☐ legitimate interests pursued by the controller or by a third party

6. Personal data included in the research data

Personal data will be collected: name, organization, email address, phone number. This data will be stored to allow for follow-up activities during the course of the project. In addition, the interview responses are considered personal data.

Sources of personal data. The personal data will originate from the participants themselves, or from publicly available sources, such as email addresses of staff of an organization.

Sensitive personal data. No sensitive personal data will be processed in the study (No data considered as special category under Article 9 of the General Data Protection Regulation).

7. Transfer of personal data to third parties

The personal data will not be transferred or disclosed to recipients outside of the research group listed above. No personal data will be transferred to recipients outside of the European Economic Area.

8. Automated decisions

No automated decisions are made.

9. Safeguards to protect the personal data

The data is confidential.

Personal data processed in IT systems

☒ username ☒ password ☐ logging ☐ access control ☐ encryption
☐ other: (please specify)

Protection of data in physical format

Written notes from the interviews will be stored in the personal suitcase of the researcher during fieldwork, and then at the researcher's office under key.

Processing of direct identifiers

☐ The data is collected without direct identifiers
☒ Direct identifiers will be removed in the analysis phase
☐ The material to be analysed includes direct identifiers. Reason: (reason for retention of direct identifiers

10. Retention of personal data after the completion of the study

☐ The research material will be deleted
☒ The research material will be archived:
☒ without identifiers ☐ with identifiers

The research material will be archived on secure servers of the University of Helsinki, and only as long as the data is useful for further research on the same topic.

11. Your rights as a data subject, and exceptions to these rights

The contact person in matters concerning the rights of the participant is the person mentioned in section 1 of this notice.

Rights of data subjects

According to the General Data Protection Regulation (GDPR), data subjects have the right:

- of access to their data
- to rectification of their data
- to the erasure of their data and to be forgotten
- to restrict the processing of their data
- to data portability
- to object to the processing of their data
- not to be subject to a decision based solely on automated processing

Not all of these rights can be exercised in all situations, depending on factors such as the basis for the processing of personal data. For more information on the rights of data subjects in different situations, please see the Data Protection Ombudsman's website: https://tietosuoja.fi/en/what-rights-do-data-subjects-have-in-different-situations.

Exceptions to data subject rights

Under the General Data Protection Regulation and the Finnish Data Protection Act, certain exceptions to the rights of data subjects can be made when personal data is processed in scientific research and fulfilling the rights would render impossible or seriously impair the achievement of the objectives of the processing (in this case, scientific research). The necessity of exceptions to the rights of data subjects will always be assessed on a case by case basis.

Right to lodge a complaint

You have the right to lodge a complaint with the Data Protection Ombudsman's Office if you think your personal data has been processed in violation of applicable data protection laws.

Contact details:

Data Protection Ombudsman's Office (Tietosuojavaltuutetun toimisto)
Address: Ratapihantie 9, 6th floor, 00520 Helsinki
Postal address: B.O. Box 800, 00521 Helsinki
Tel. +358(0)29 56 66700 Fax: +358(0)29 56 66735
E-mail: tietosuoja@om.fi